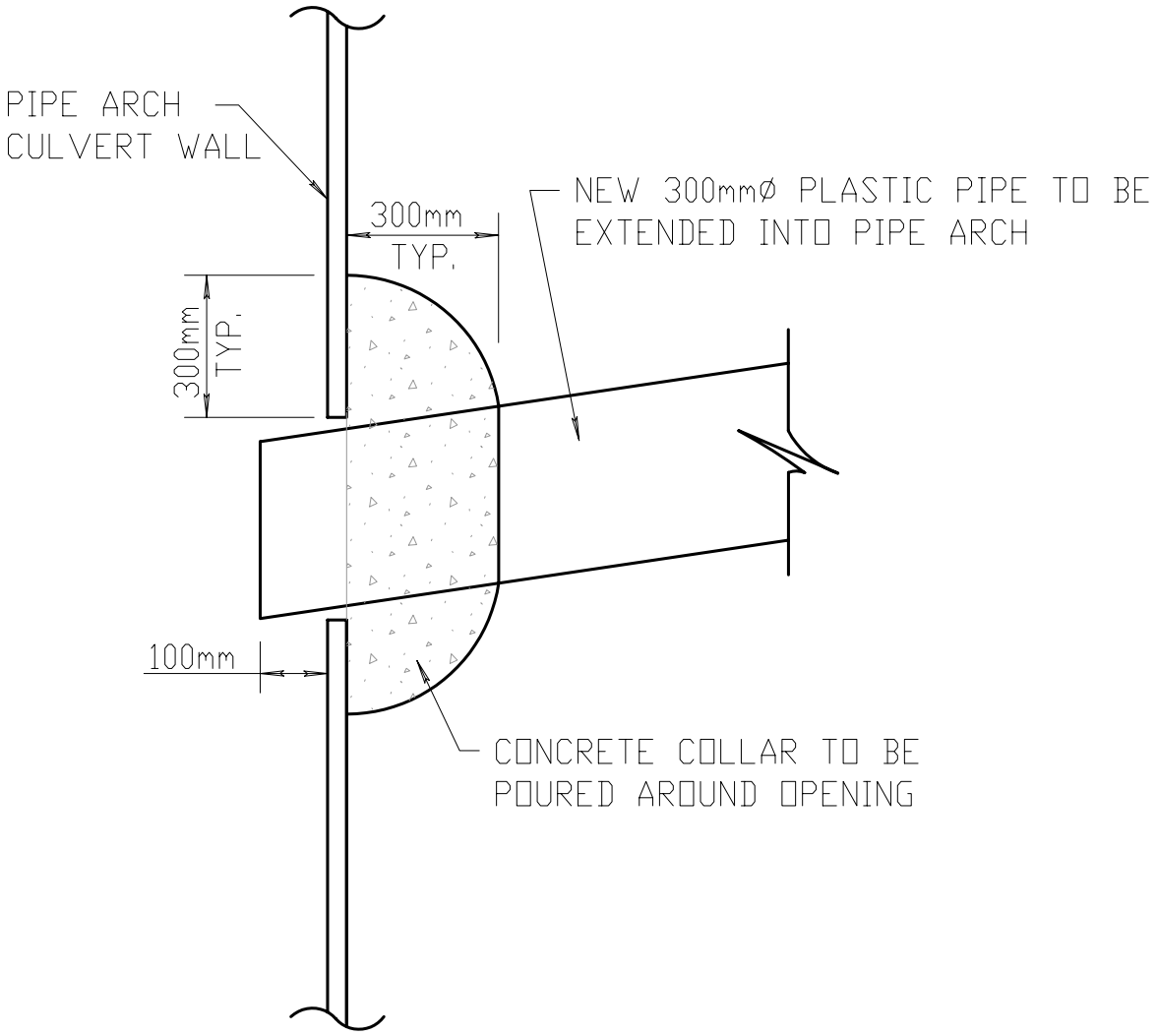

CONCRETE COLLAR

NOT TO SCALE

4/1/98

REVISED