REVISED 1/1/04

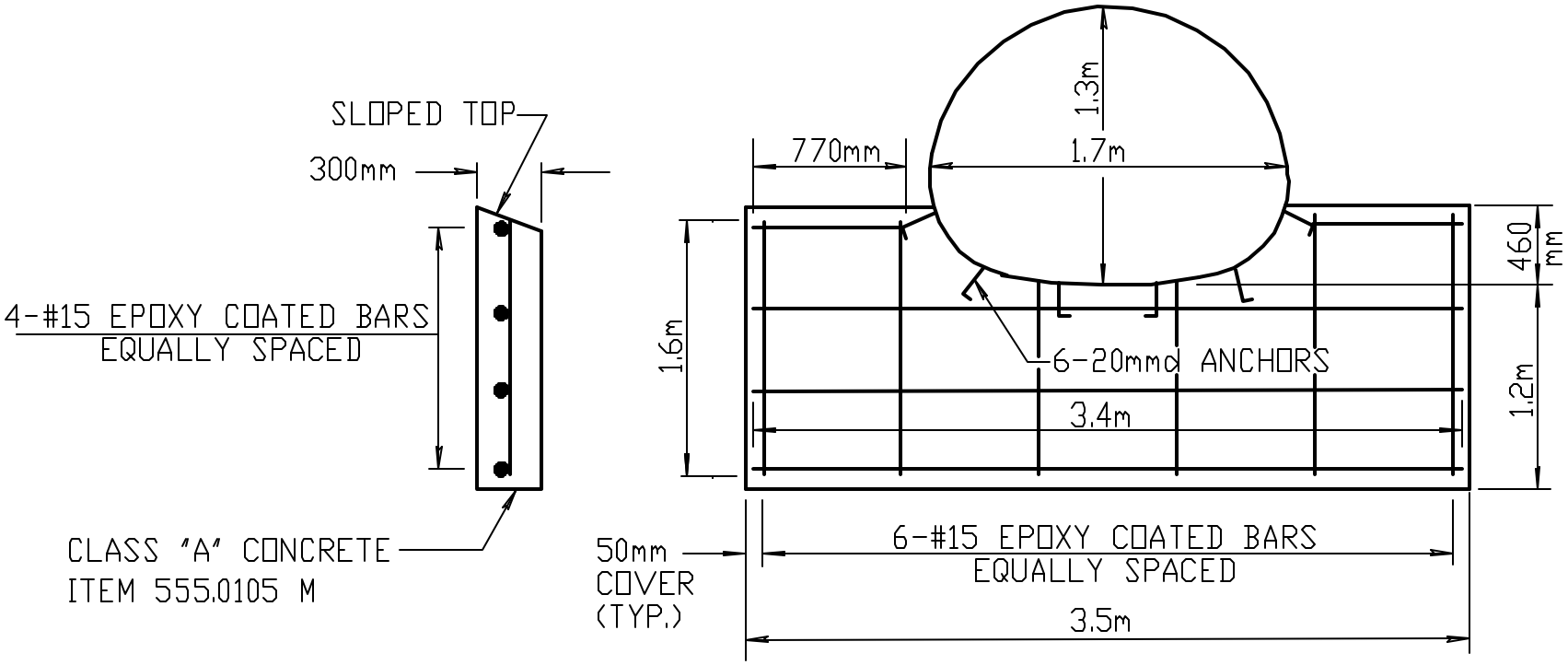

CUTOFF WALL

NOT TO SCALE