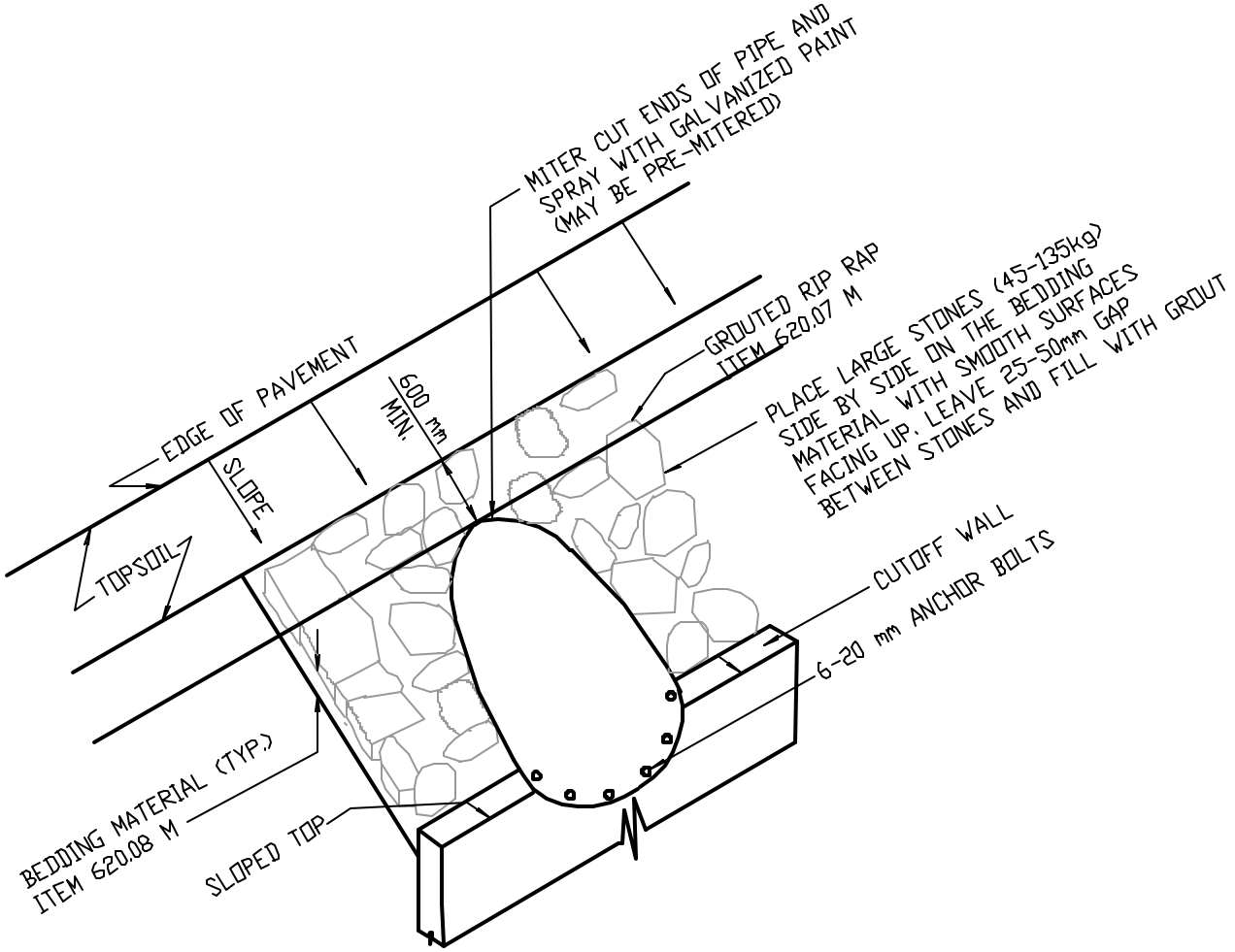

RIP-RAP DETAIL AT CROSS CULVERT ENDS

NOT TO SCALE

4/1/98

REVISED