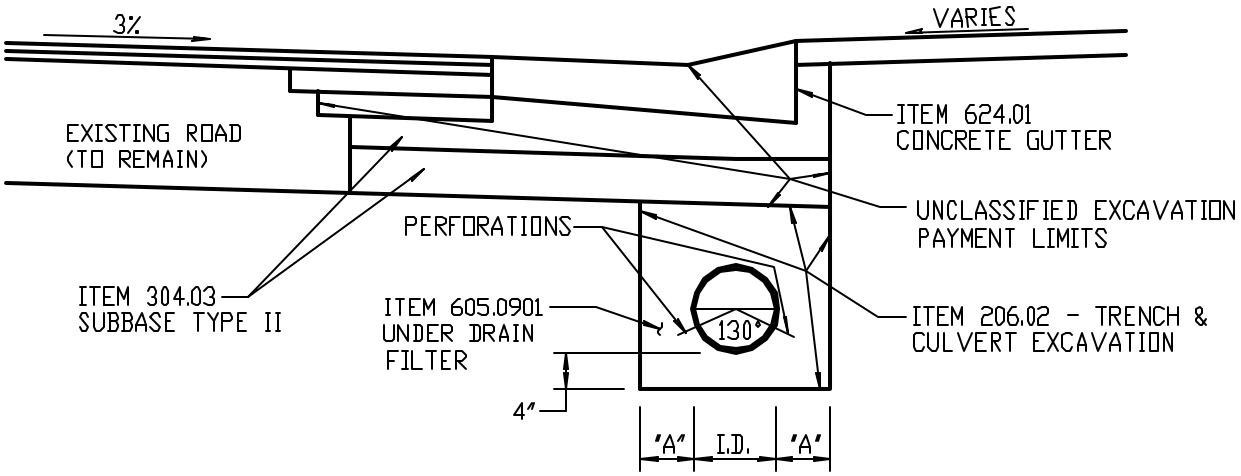

PIPE DIA.	DIM. "A"
UP TO 1'-6"	1'-0"
1'-7" TO 3'-0"	1'-6"
OVER 3'-0"	2'-0"

CONCRETE GUTTER WITH PERFORATED STORM SEWER

NOT TO SCALE

2/14/03

REVISED