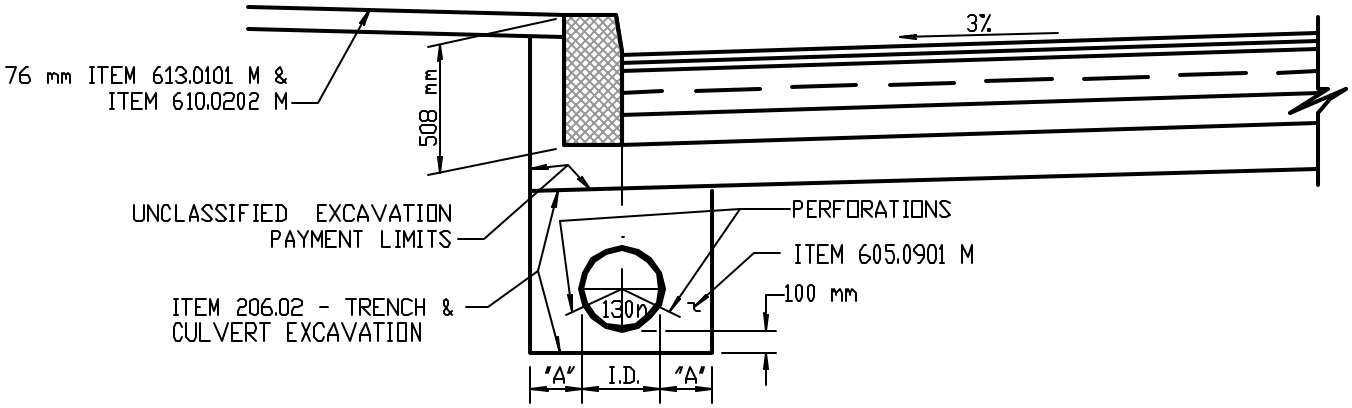

PIPE DIA.	DIM. "A"
UP TO 450 mm	300 mm
475 TO 900 mm	450 mm
OVER 900 mm	600 mm

CURB WITH PERFORATED STORM SEWER

NOT TO SCALE

01/01/01

REVISED