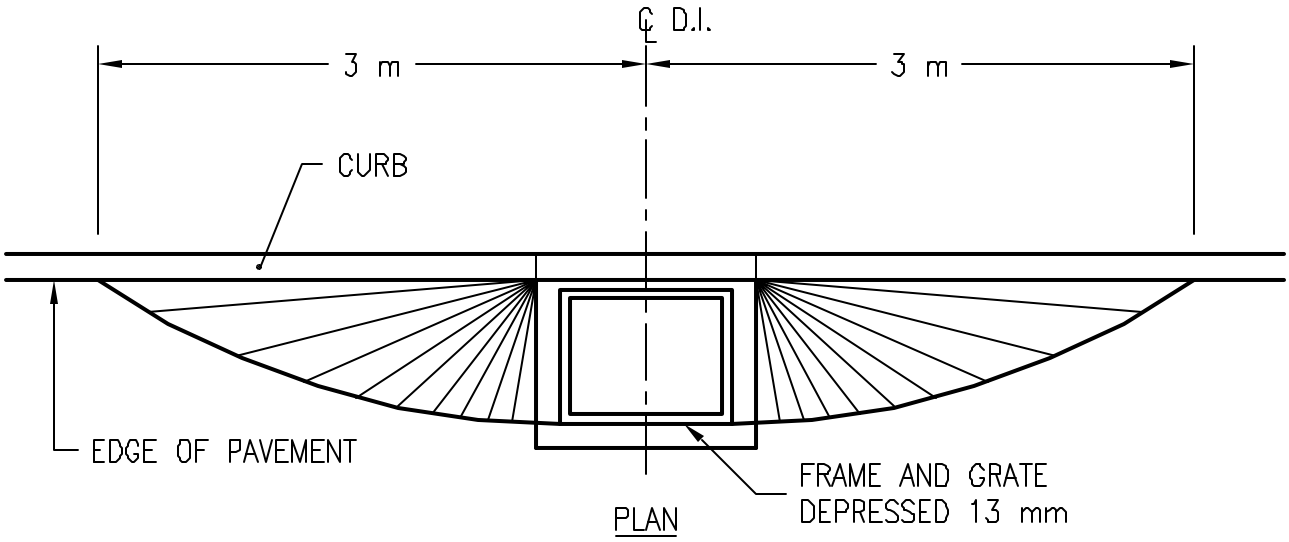

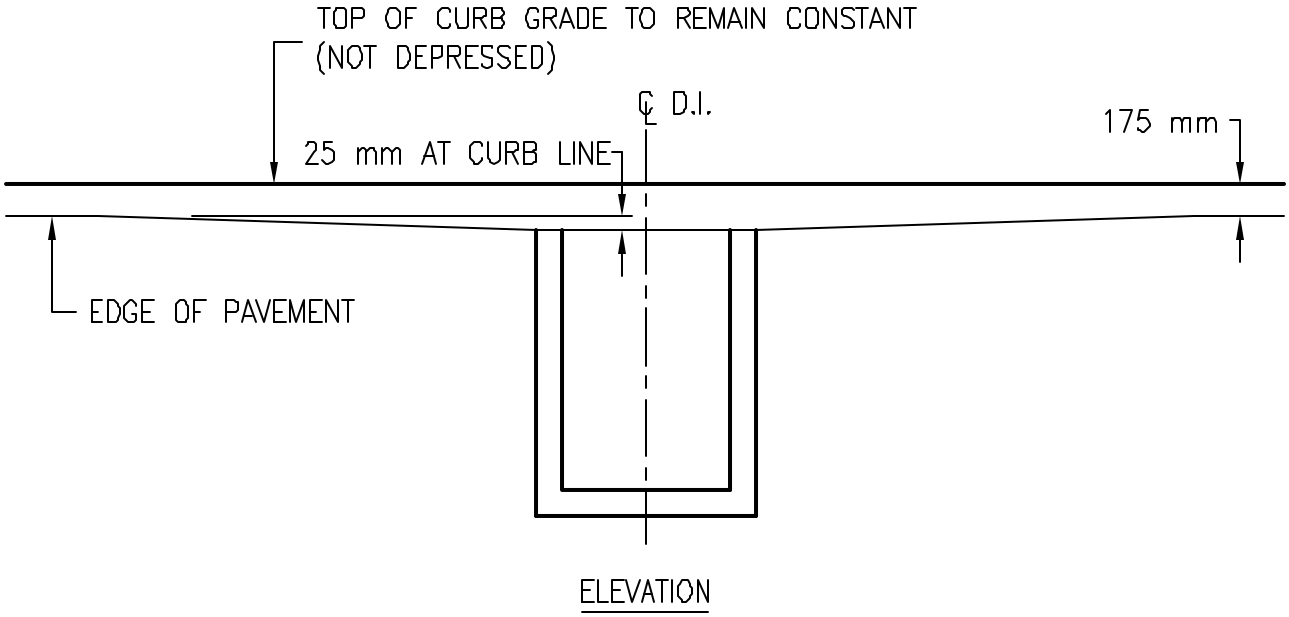

DEPRESSED INLET PAVING

NOT TO SCALE

2/2/04

REVISED