REVISED 2/2/04

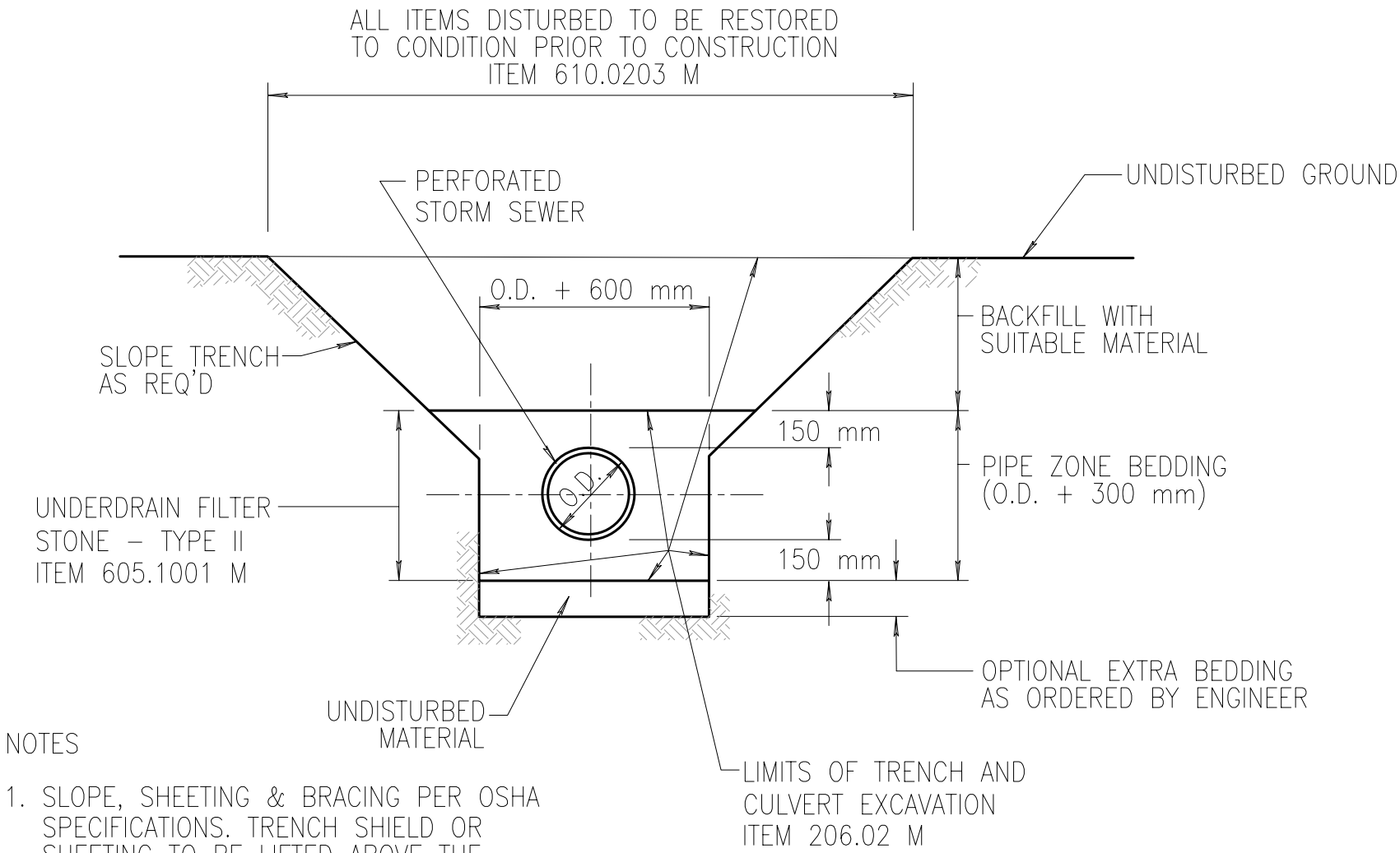

NOTES

1. SLOPE, SHEETING & BRACING PER OSHA SPECIFICATIONS. TRENCH SHIELD OR SHEETING TO BE LIFTED ABOVE THE SPRING LINE.
2. WHERE STORM SEWER CROSSES PREVIOUSLY INSTALLED SANITARY SEWER, WATER OR GAS MAIN, ETC. TRENCH SHALL BE EXCAVATED DOWN TO THE PREVIOUSLY LAID UTILTY AND BACKFILLED WITH #2 CRUSHED STONE COMPACTED IN 150mm LIFTS TO INSURE ADEQUATE SUPPORT.

STORM SEWER TRENCH IN GRASS AREA

NOT TO SCALE