REVISED 1/1/04

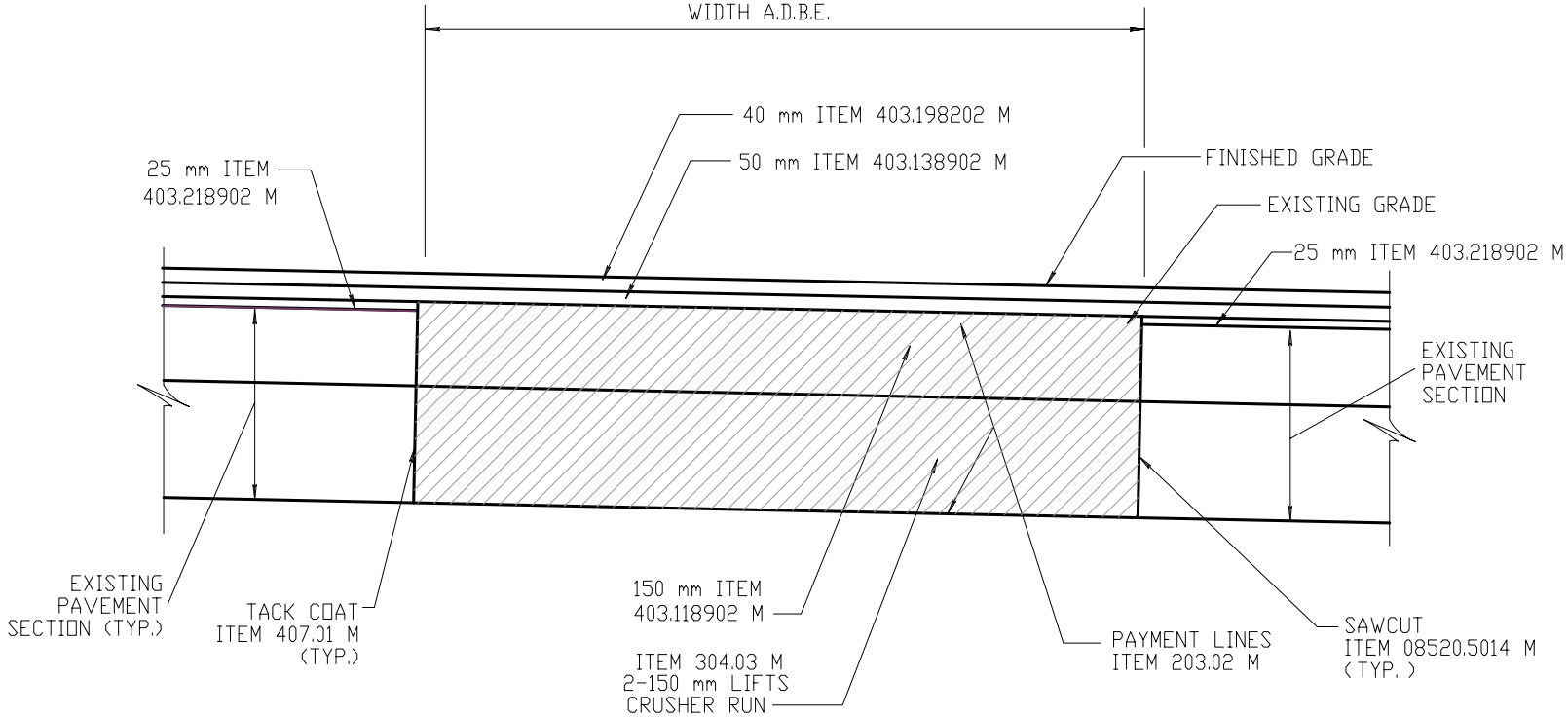

NOTES:

1. FINAL LOCATIONS AND DIMENSIONS OF FULL DEPTH REPLACEMENT AREAS TO BE DETERMINED IN THE FIELD BY THE ENGINEER PRIOR TO THE PLACEMENT OF THE TRUING AND LEVELING COURSE (ITEM 403.218902 M).

TRENCH REPLACEMENT - FULL DEPTH WITH ASPHALT OVERLAY

NOT TO SCALE