REVISED 3/31/03

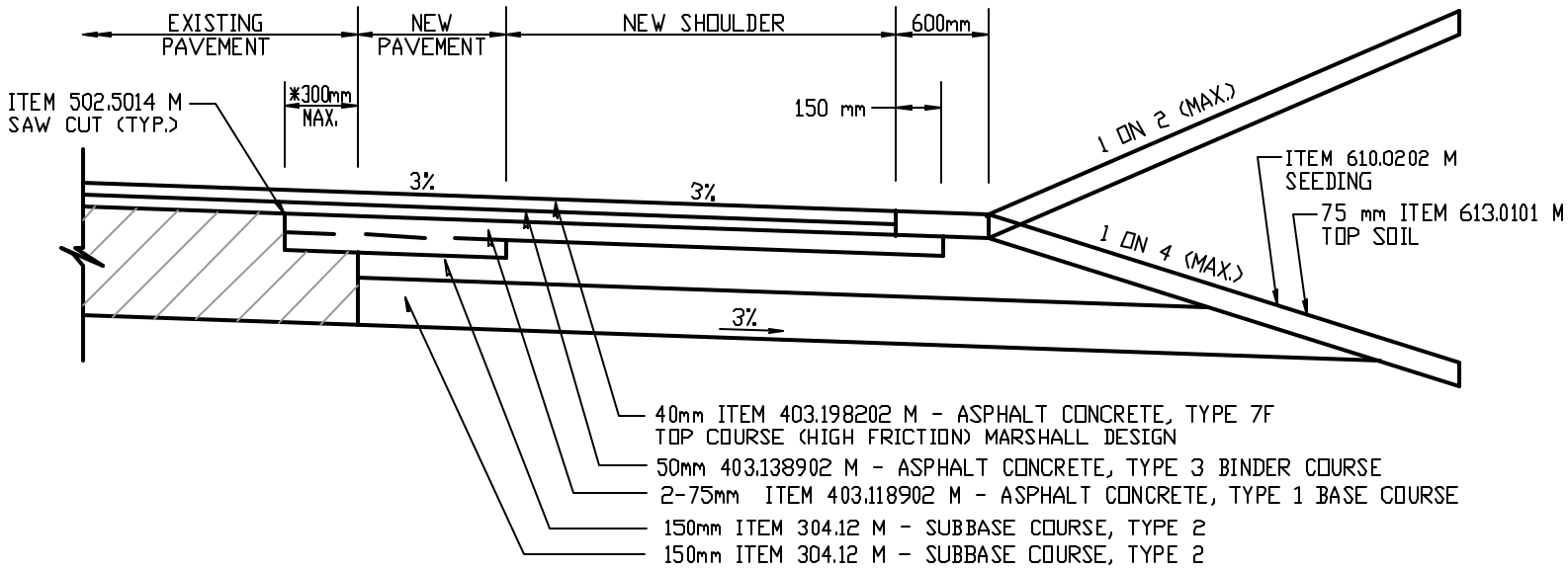

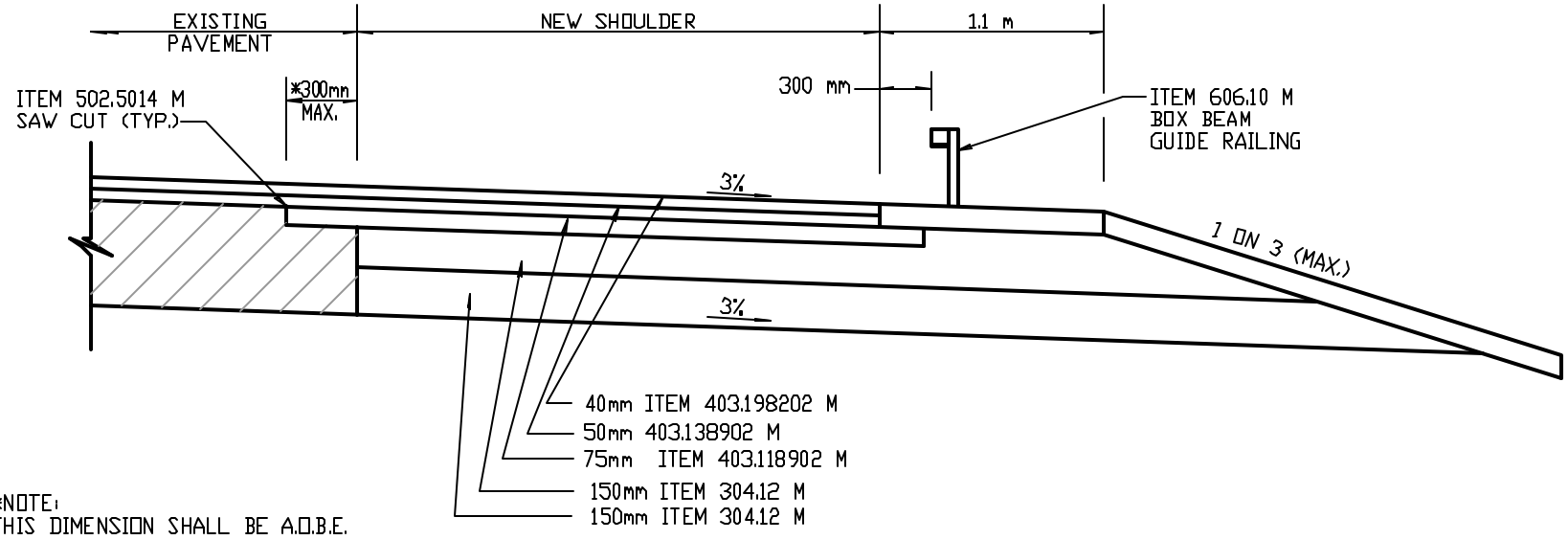

*NOTE:
THIS DIMENSION SHALL BE A.O.B.E.

TYPICAL SECTION WITH NEW SHOULDERS

NOT TO SCALE