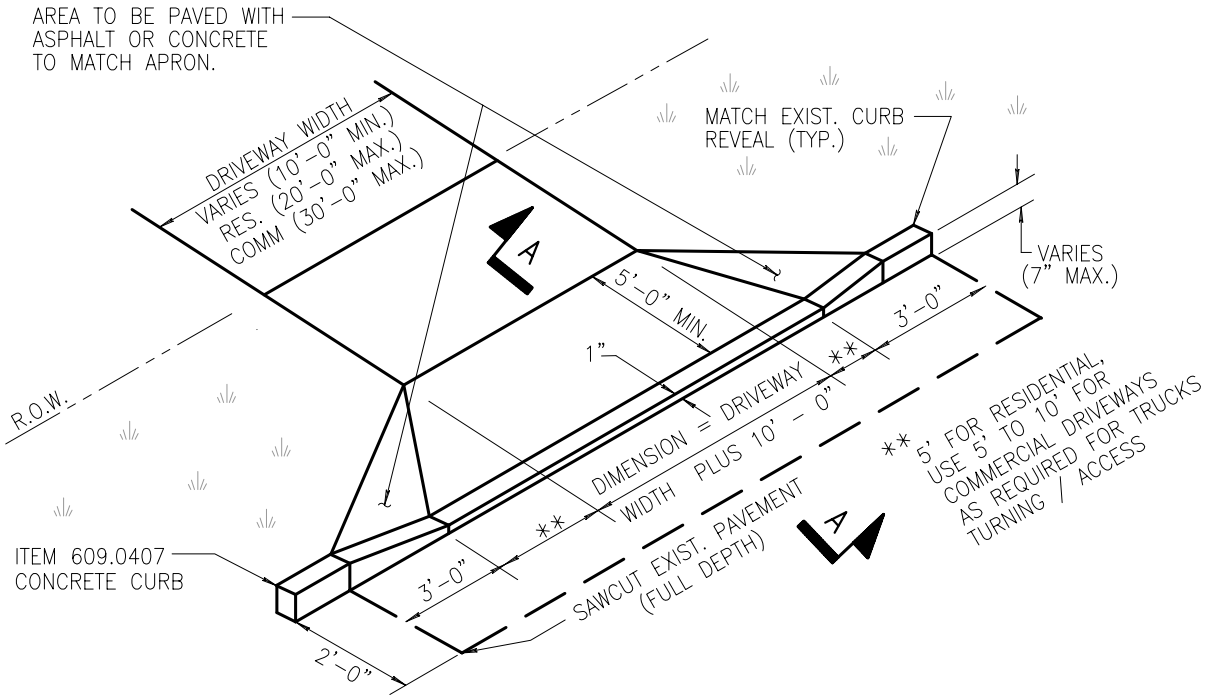

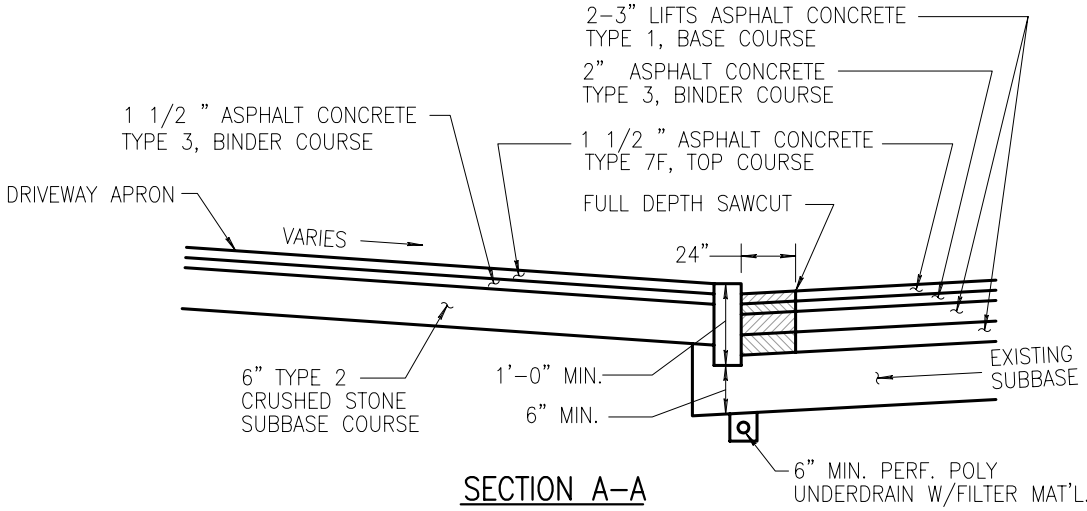

SECTION A-A

NOTE: UNDERDRAIN SHALL BE 3'-0" MINIMUM DEPTH FROM PAV'T. TO INVERT

NOTES:

1. USE CURB CUTTING SAW TO SAWCUT EXISTING CURB TO NEW DRIVEWAY DIMENSIONS.
2. IF CURB REPLACEMENT ALLOWED, EXISTING PAVEMENT SHALL BE SAWCUT PRIOR TO CURB REPLACEMENT. ALL PAVEMENT JOINTS SHALL BE TACK COATED AND SEALED WITH BITUMINOUS SEALER.
3. TOPSOIL AND SEED ALL DISTURBED AREAS WITH TOPSOIL ITEM NO. 613.0101 AND SEED ITEM NO. 610.0203.
4. EXPANSION JOINT MATERIAL TO BE PLACED A.O.B.E.
5. IT IS DESIRABLE THAT DRIVEWAYS TO COUNTY ROADS BE PAVED TO THE RIGHT-OF-WAY LINE. THE DRIVEWAY SHALL SLOPE AWAY FROM THE OUTSIDE EDGE OF THE SHOULDER AT A MINIMUM OF 1/2 INCH PER FOOT TO THE CENTERLINE OF DRAINAGE.
6. REPLACE PAVEMENT IN KIND WITH WHAT IS EXISTING, UNLESS CONDITIONS EXIST WHERE THAT ISN'T FEASIBLE, THEN INSTALL SECTION AS APPROVED BY THE DEPARTMENT'S ENGINEER OR HIGHWAY MAINTENANCE MANAGER. THE MINIMUM SECTION APPROVED SHALL BE 6 INCHES OF TYPE 2 SUBBASE (CRUSHER RUN STONE). 2" OF ASPHALT CONCRETE TYPE 3 BINDER AND 1 1/2 " OF ASPHALT CONCRETE TYPE 7F TOP.
7. REFER TO CONCRETE APRON OR DRIVEWAY SECTION DETAIL FOR CONCRETE DRIVEWAYS.

DRIVEWAY APRON WITH CONCRETE CURB

NOT TO SCALE

2/2/04

REVISED