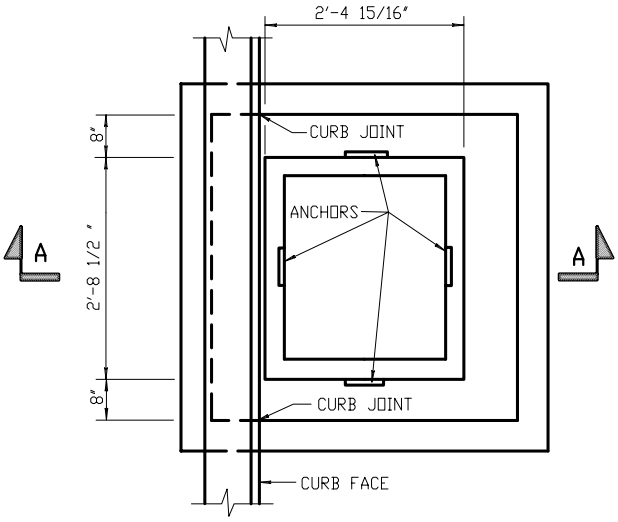

PLAN FOR 18" OR LESS PIPE

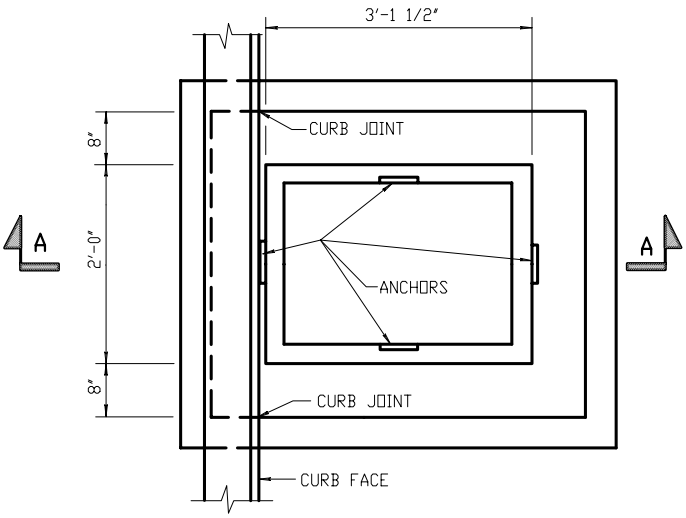

PLAN FOR PIPE GREATER THAN 18" UP TO 24"

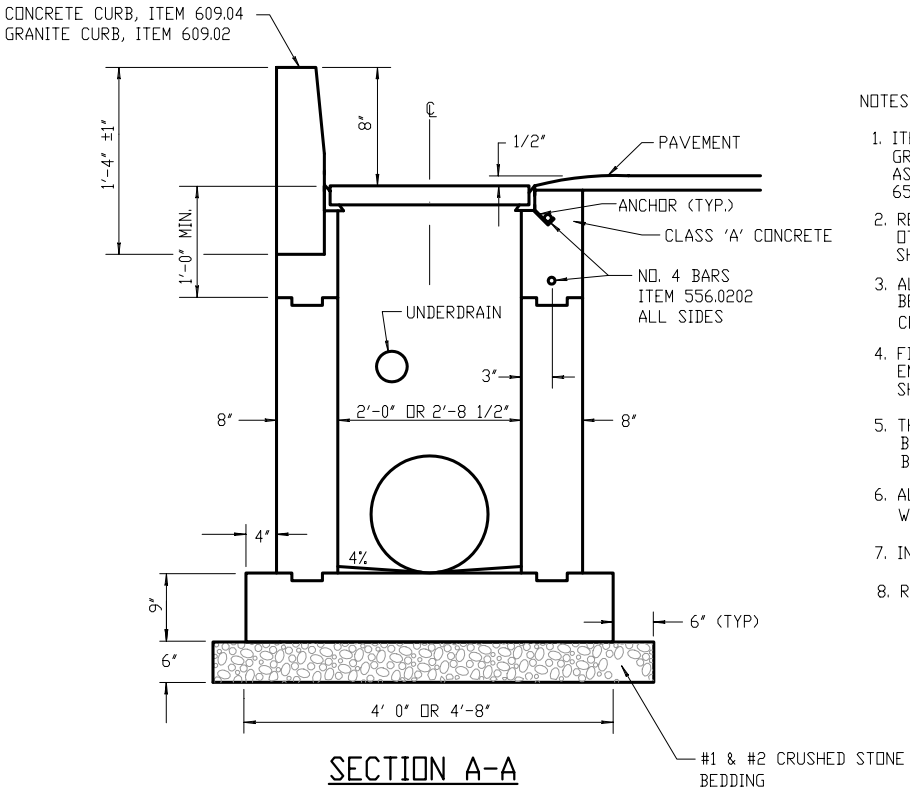

SECTION A-A

NOTES:

1. ITEM 655.02 FRAME & GRATE- FRAME 2'-4 15/16 " X 3'-1 1/2 " GRATE 2'-3 11/16 " X 3'-0 1/2 " RETICULINE FRAME & GRATE ASSEMBLY TYPE NO. 11, SEE N.Y.S.D.O.T. STANDARD SHEET 655-3. PAYMENT AREA = 7.2 SQ. FEET
2. REINFORCEMENT SHALL HAVE A COVER OF 2" UNLESS OTHERWISE SHOWN. THE COST OF ALL BAR REINFORCEMENT SHALL BE INCLUDED IN THE PRICE BID FOR DROP INLETS.
3. ALL CONCRETE FOR DROP INLETS SHALL BE CLASS "A". BENCHES SHALL BE CAST-IN-PLACE COST TO BE INCLUDED IN DROP INLET ITEM.
4. FILL WITH CEMENT MORTAR AND SEAL WITH ASPHALT EMULSION TACK COAT BETWEEN FRAME AND CURB. PAYMENT SHALL BE INCLUDED IN APPROPRIATE CURB ITEM.
5. THE INTERIOR AND EXTERIOR OF ALL DROP INLETS SHALL BE COATED WITH TWO COATS OF KOPPERS SUPER SERVICE BLACK OR APPROVED EQUAL.
6. ALL PIPE CONNECTION TO STRUCTURE SHALL BE SEALED WITH 100% MORTAR
7. INTERIOR DIMENSIONS SHALL BE 2'-0" BY 2'-8 1/2"
8. REFER TO FRAME AND GRATE ANCHOR DETAIL

DROP INLET TYPE "S" CAST-IN-PLACE AGAINST CURB

NOT TO SCALE

2/2/04

REVISED