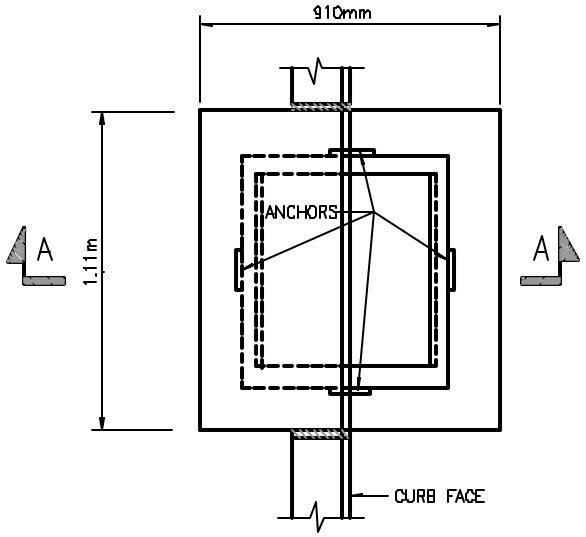

PLAN FOR 450mm OR LESS PIPE

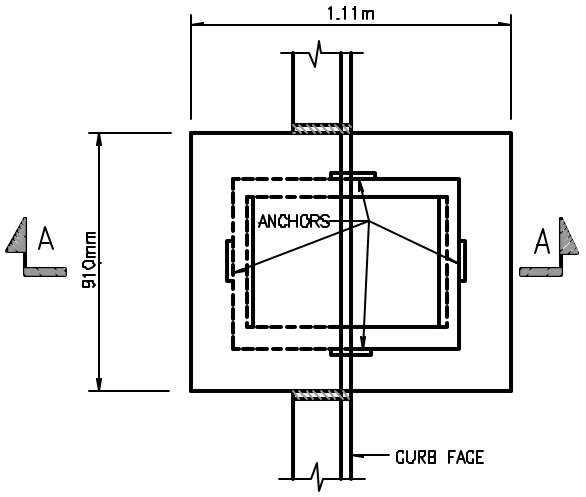

PLAN FOR PIPE GREATER THAN 450 mm TO 600 mm

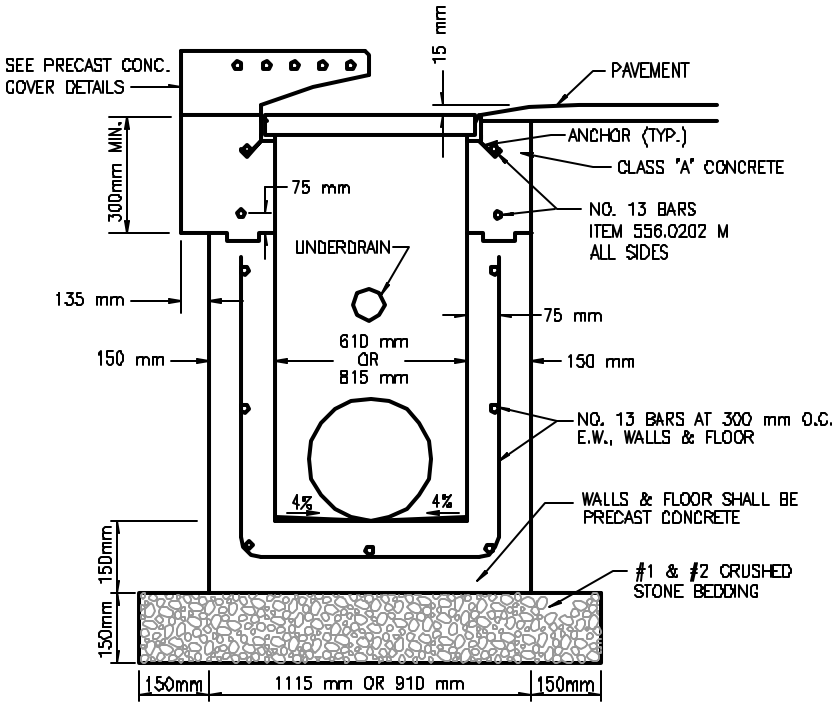

SECTION A–A

NOTES:

1. ITEM 655.0201 M FRAME & GRATE– FRAME 735 mm X 953 mm GRATE 703 mm X 927 mm RECTANGULAR FRAME & GRATE ASSEMBLY TYPE NO. 11, SEE N.Y.S.D.O.T. STANDARD SHEETS SHEETS M655-6 & M655-11R1 PAYMENT AREA = 0.700 SQ. METERS
2. REINFORCEMENT SHALL HAVE A COVER OF 50 mm UNLESS OTHERWISE SHOWN. THE COST OF ALL BAR REINFORCEMENT SHALL BE INCLUDED IN THE PRICE BID FOR DROP INLETS. ALL BAR REINFORCEMENT IN THE PRECAST STRUCTURE SHALL BE ACCORDING TO NYSDOT STANDARD SHEET M604-5
3. INSIDE DIMENSIONS OF PRECAST UNIT SHALL BE 810 mm x 815 mm
4. FILL WITH CEMENT MORTAR AND SEAL WITH ASPHALT ENULSION TACK COAT BETWEEN FRAME AND CURB. PAYMENT SHALL BE INCLUDED IN APPROPRIATE CURB ITEM.
5. THE INTERIOR SIDES AND EXTERIOR BOTTOM AND SIDES OF ALL DROP INLETS TO BE COATED WITH TWO COATS OF KOPPERS SUPER SERVICE BLACK OR APPROVED EQUAL.
6. ALL PIPE CONNECTIONS TO STRUCTURE SHALL BE SEALED WITH 100% MORTAR.
7. CLASS "A" CONCRETE BENCHES SHALL BE CAST–IN–PLACE ON ALL STORM DROP INLETS REGARDLESS OF PIPE DIAMETER. COST TO BE INCLUDED IN DROP INLET ITEM.
8. REFER TO FRAME & GRATE ANCHOR DETAIL.

DROP INLET TYPE "S" PRECAST WITH RECESSED CURB

NOT TO SCALE

2/8/03

REVISED