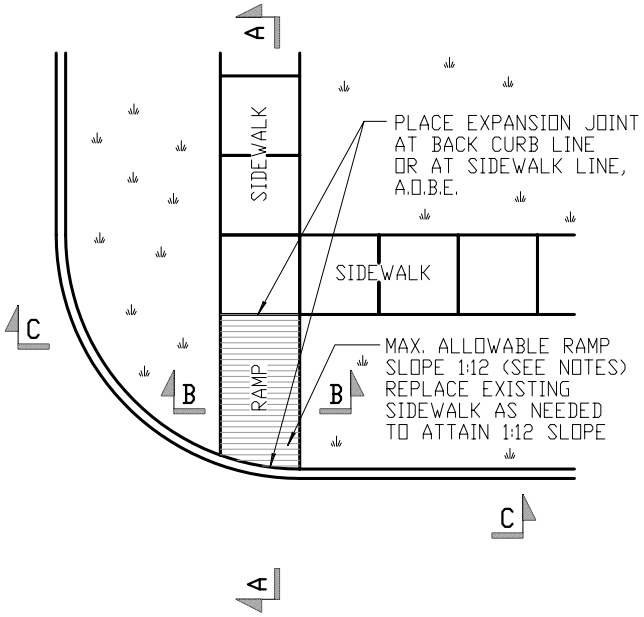

PLAN

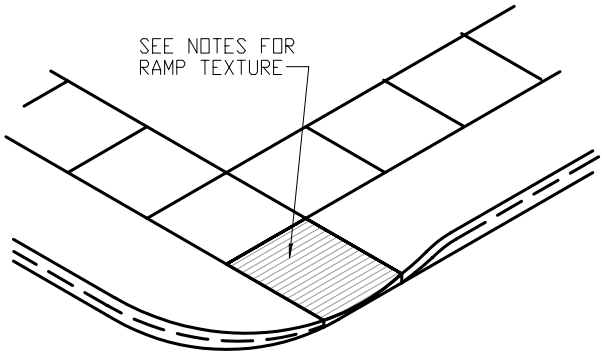

PLAN VIEW

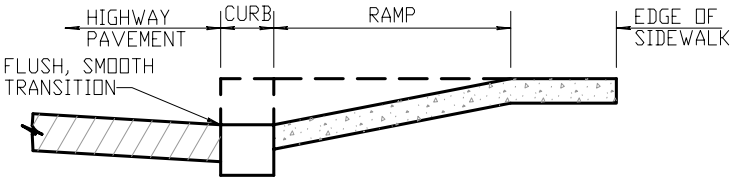

SECTION A - A

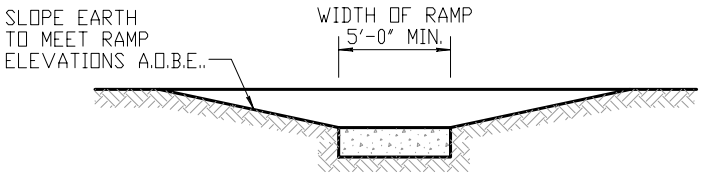

SECTION B - B

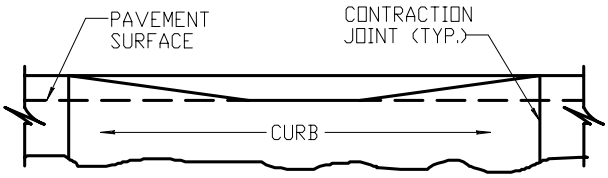

SECTION C - C

SIDEWALK RAMP - TYPE 1

NOT TO SCALE

10/1/00

REVISED