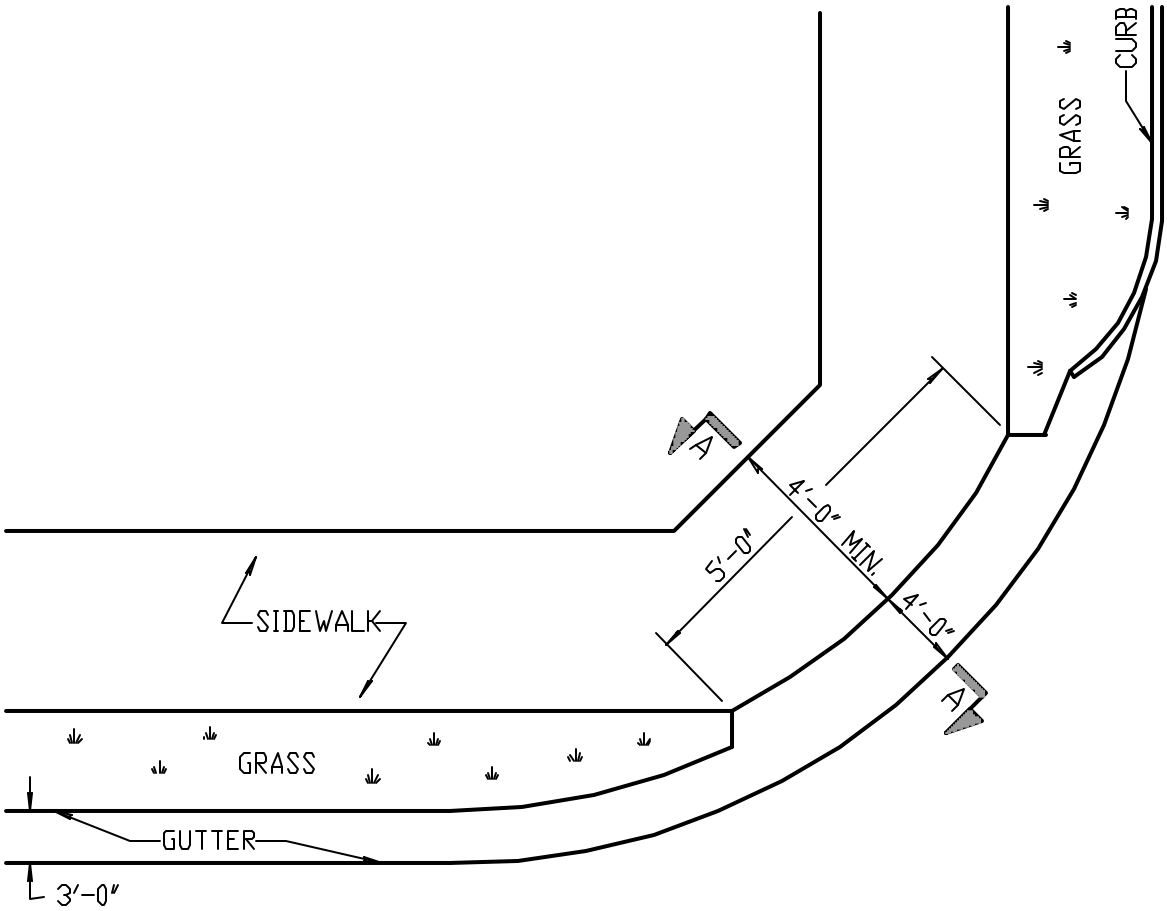

PLAN

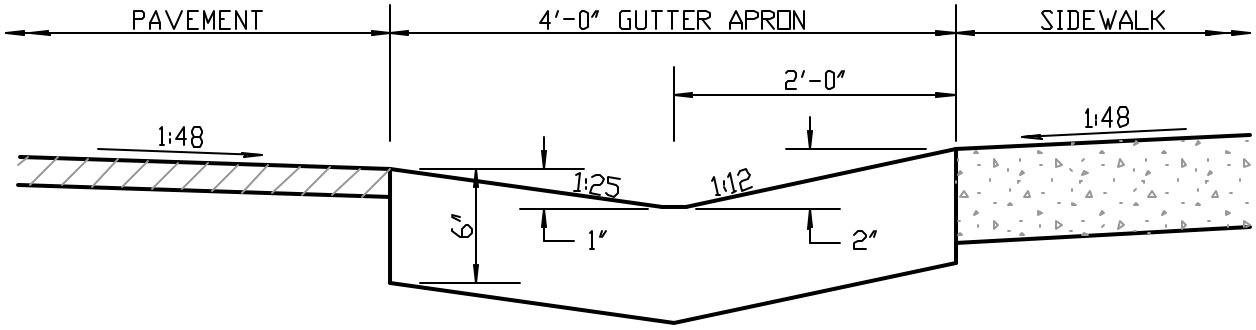

SECTION A - A

SIDEWALK RAMP WITH GUTTER

NOT TO SCALE

4/1/98

REVISED