REVISED 2/14/03

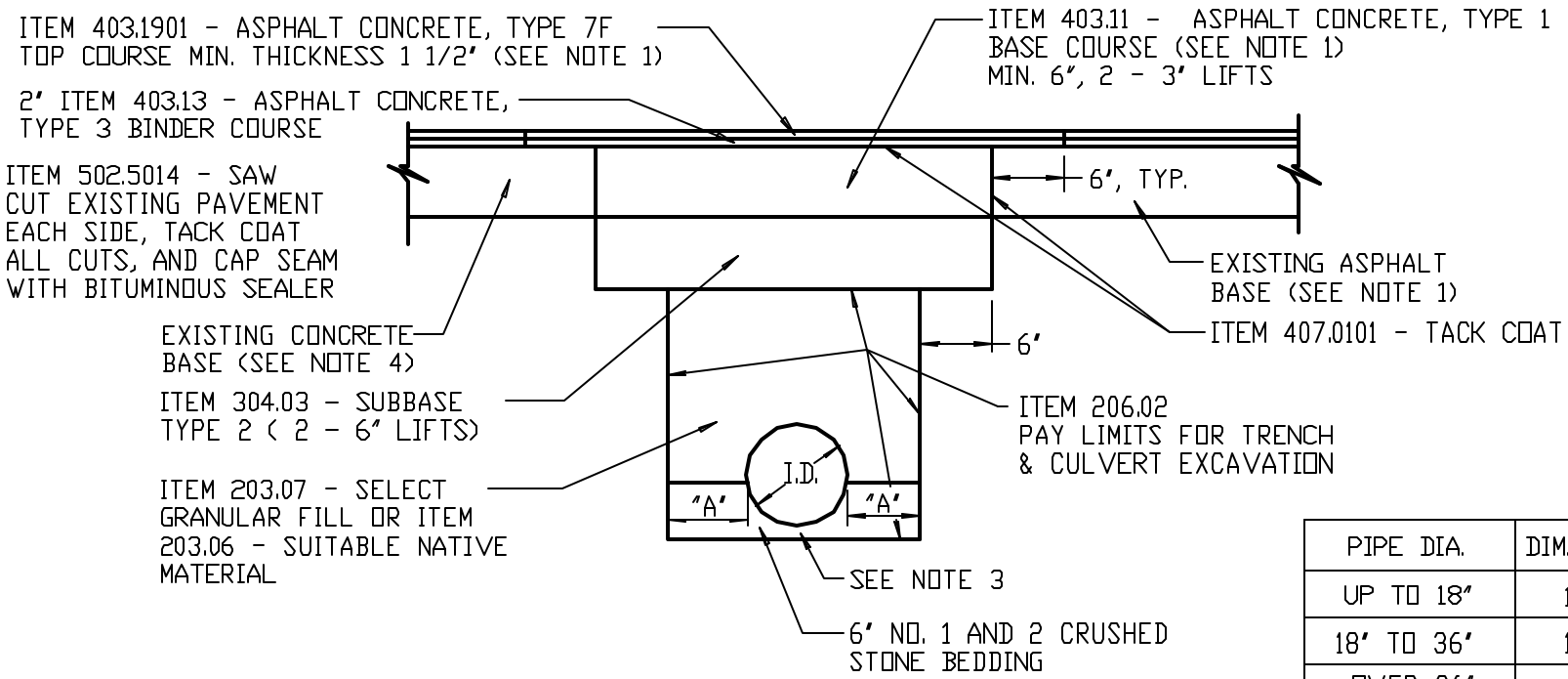

PIPE DIA.	DIM. "A"
UP TO 18"	12"
18" TO 36"	18"
OVER 36"	24"

1. REPLACE PAVEMENT IN KIND WITH WHAT IS EXISTING, UNLESS CONDITIONS EXIST WHERE THAT ISN'T FEASIBLE, THEN INSTALL SECTION AS APPROVED BY THE DEPARTMENT'S ENGINEER OR HIGHWAY MAINTENANCE MANAGER. THE MINIMUM APPROVABLE SECTION SHALL BE 6" OF ITEM 304.03 TYPE 2 SUBBASE (CRUSHER RUN STONE), 2" OF ITEM 403.13 TYPE 3 BINDER AND 1 1/2" OF ITEM 403.1901 TYPE 7F TOP. SEE NOTE #7 FOR TRENCHES LESS THAN 24" WIDTH.
2. SELECT GRANULAR FILL OR SUITABLE NATIVE MATERIAL, AS APPROVED BY THE DEPARTMENT'S ENGINEER OR HIGHWAY MAINTENANCE MANAGER, SHALL BE COMPACTED IN A MAXIMUM OF 6" LIFTS AT 95% COMPACTION.
3. 6" OF STONE BEDDING, CONSISTING OF A BLENDING OF #1 AND 2 STONE, IS REQUIRED FOR SANITARY OR STORM SEWER INSTALLATIONS WITH CRUSHED STONE HAUNCHING TO A MINIMUM OF 1/2 OF THE PIPE DIAMETER ON THE SIDE OF THE PIPE.
4. IF CONCRETE BASE IS EXISTING, IT MUST BE REPLACED WITH A MINIMUM OF 6" OF ASPHALT BASE.
5. REMOVE EXISTING PAVEMENT AND PAVEMENT BASE UNDER ITEMS 203.01 OR 203.02.
6. IF PAVEMENT MARKINGS OR SIGNAL LOOPS ARE DESTROYED, THEY MUST BE REPLACED.
7. WHEN TRENCH WIDTH IS LESS THAN 24", FLOWABLE FILL MUST BE PLACED ABOVE THE 6" OF #1 AND 2 STONE BEDDING TO BINDER GRADE. A 2" LIFT OF BINDER AND A 1 1/2" LIFT OF TOP ASPHALT MUST THEN BE INSTALLED TO FINISH GRADE.

TRENCH AND PAVEMENT RESTORATION FOR ROAD CUT

NOT TO SCALE