REVISED

4/1/98

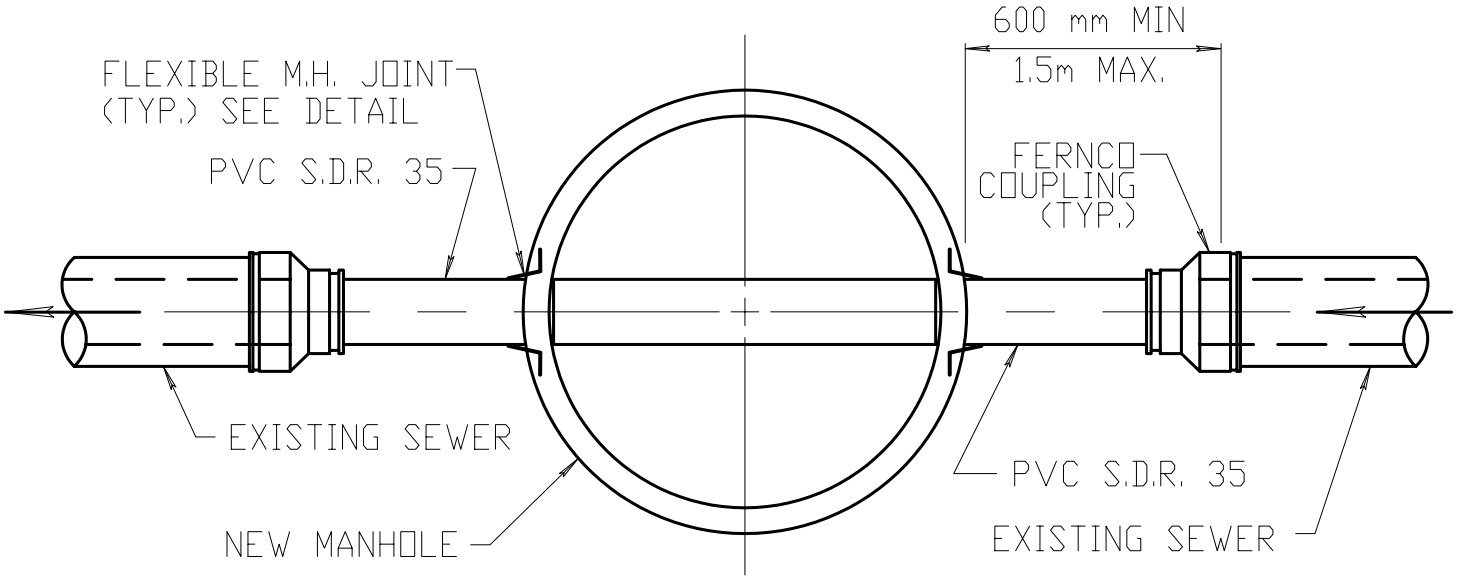

CONNECTION OF EXISTING SEWER TO NEW MANHOLE

NOT TO SCALE