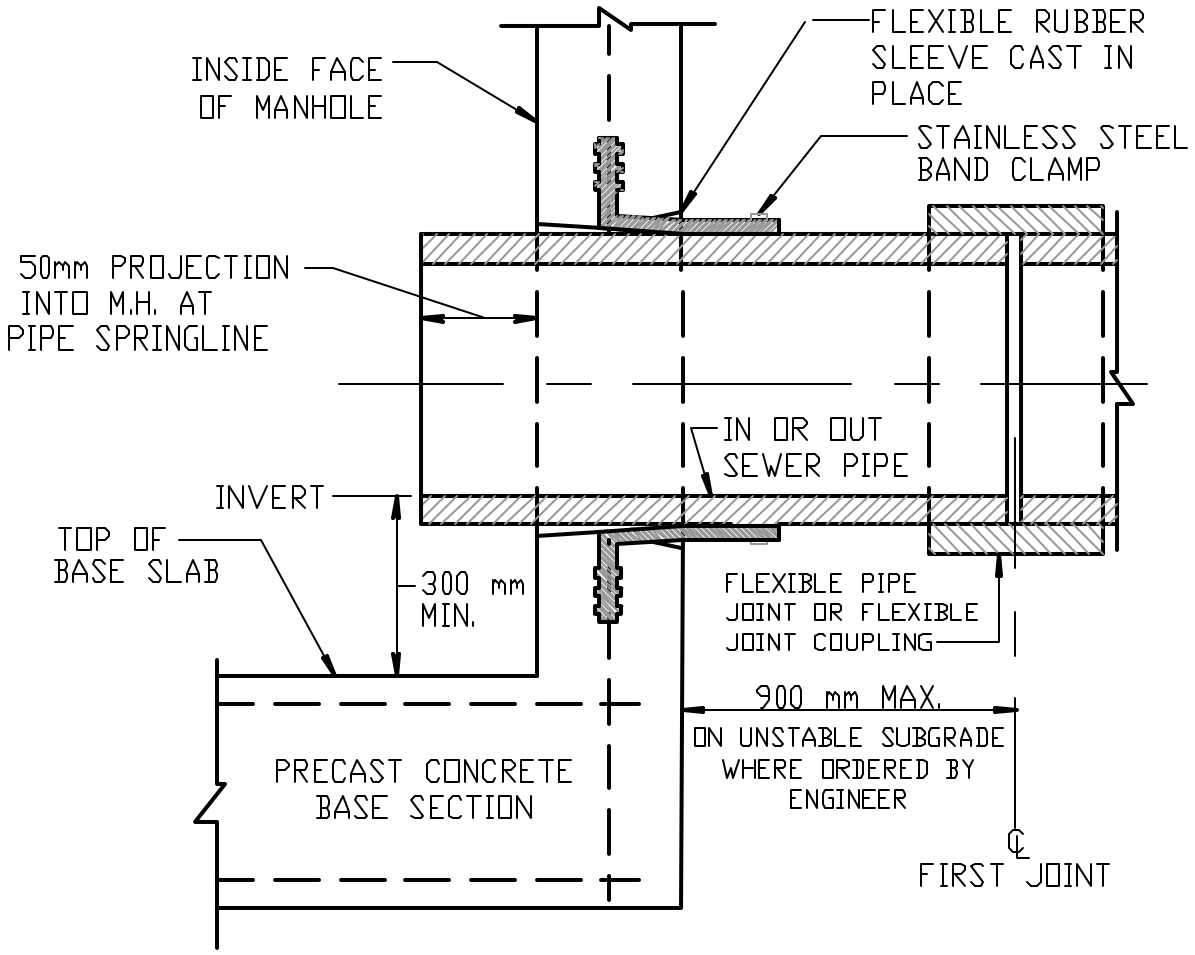

FLEXIBLE PIPE TO MANHOLE JOINT

NOT TO SCALE

4/1/98

REVISED