REVISED 4/1/01

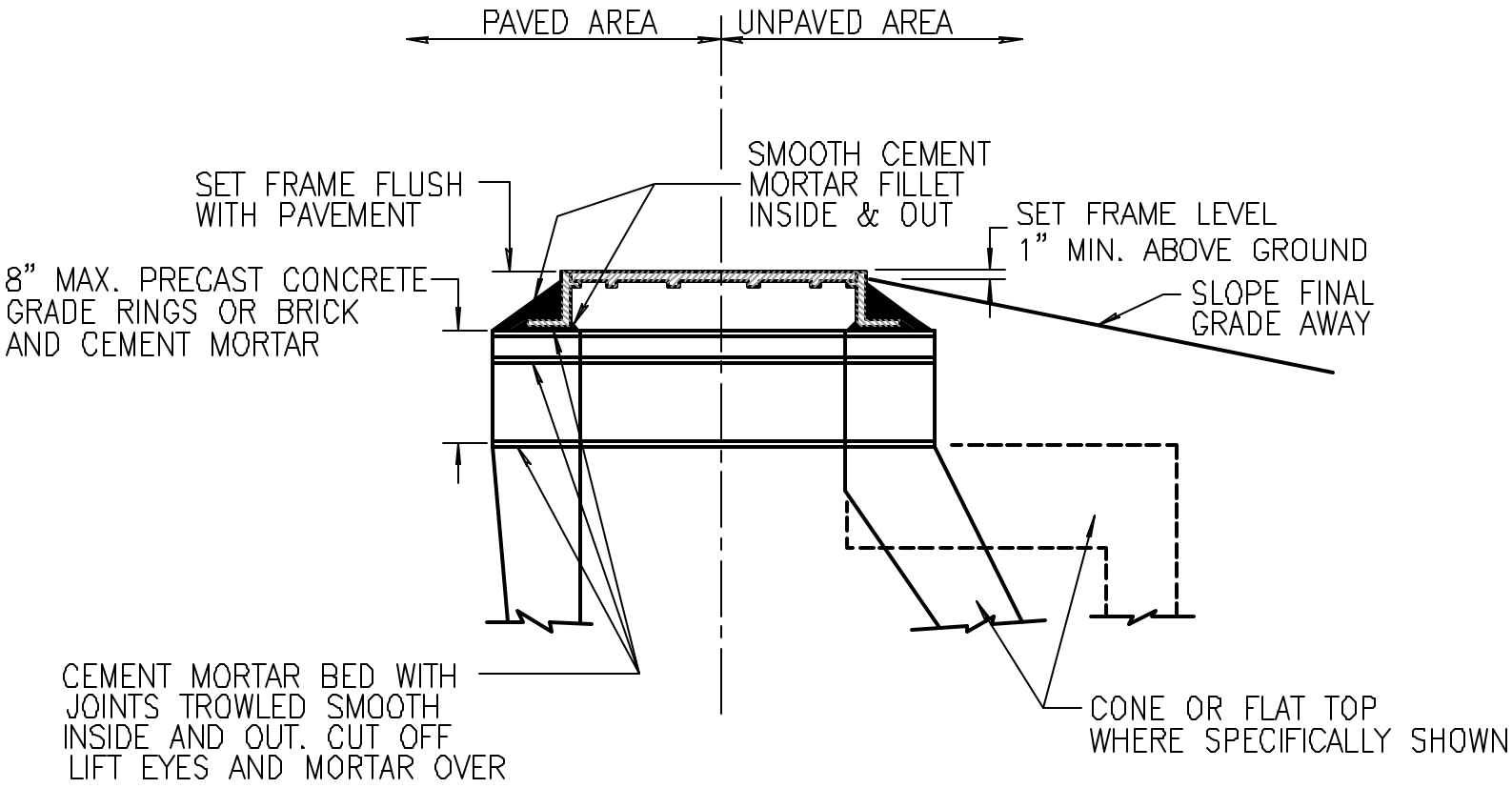

MANHOLE COVER INSTALLATION

NOT TO SCALE