REVISED 4/1/98

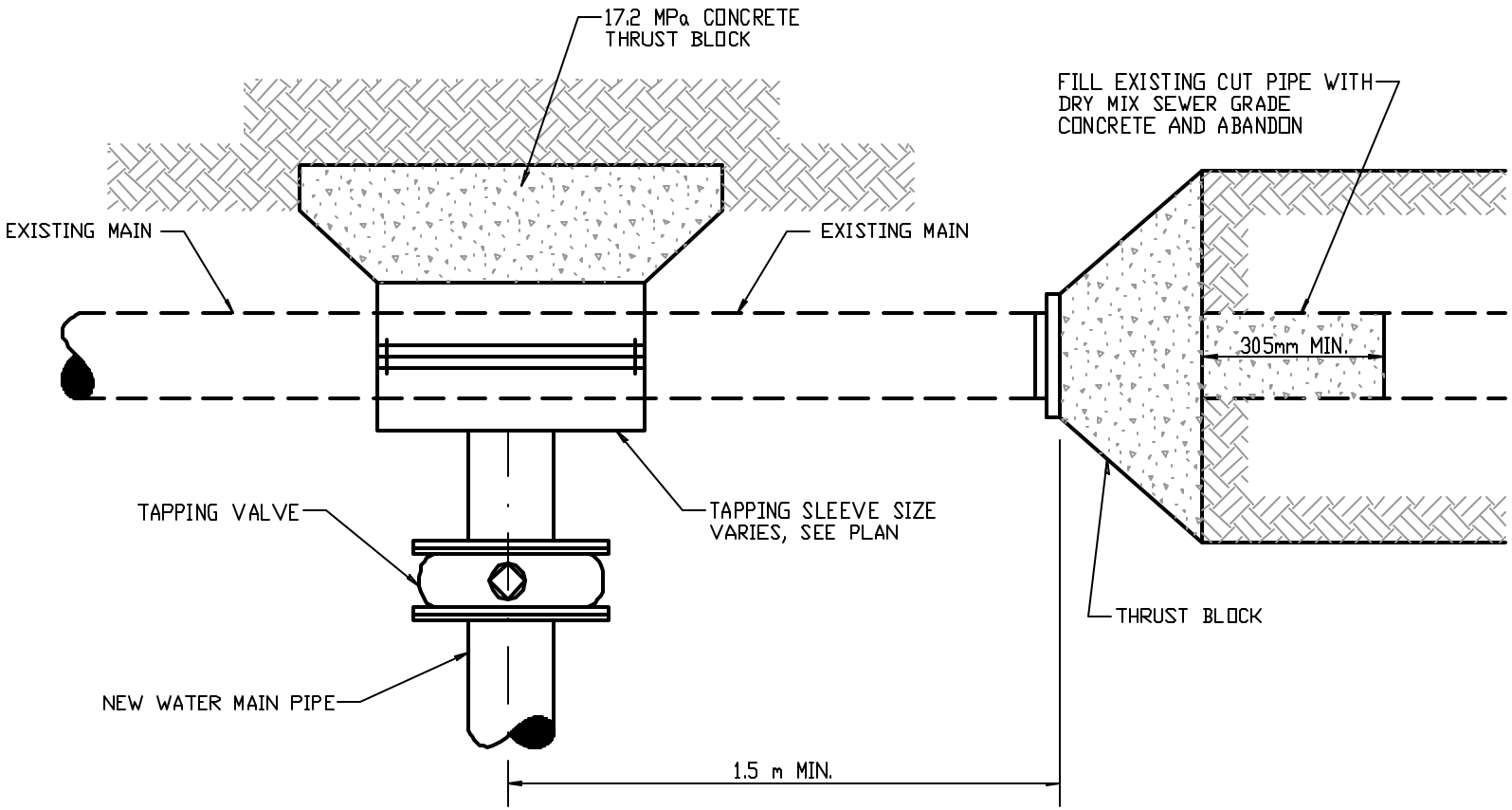

TAPPING SLEEVE AND VALVE

NOT TO SCALE