REVISED 4/1/98

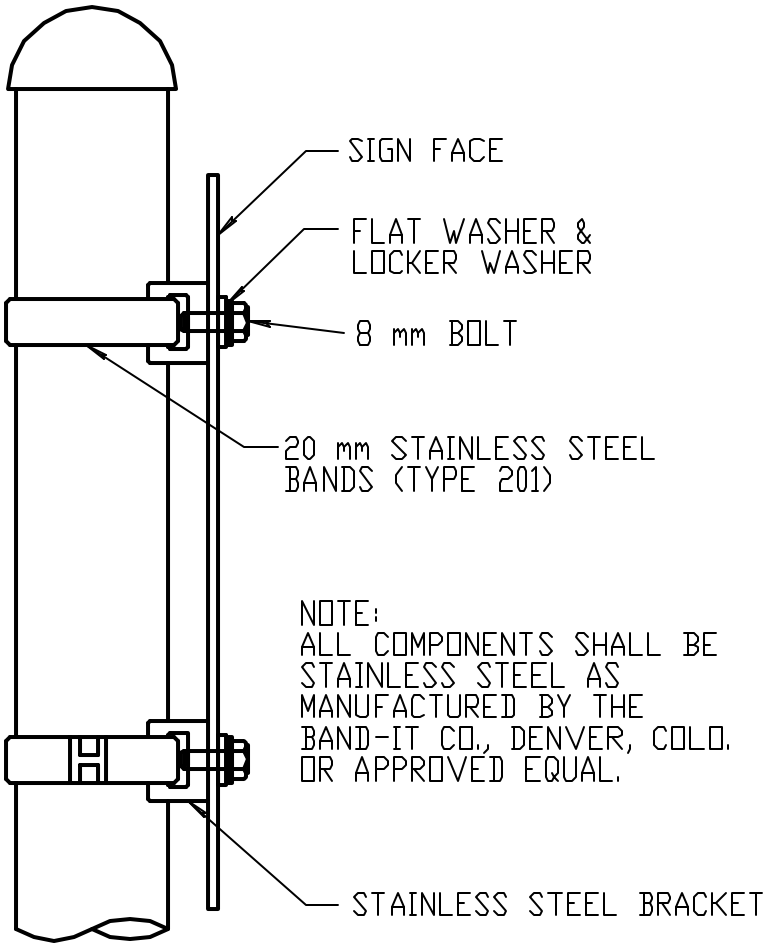

NOTE:
ALL COMPONENTS SHALL BE STAINLESS STEEL AS MANUFACTURED BY THE BAND-IT CO., DENVER, COLO. OR APPROVED EQUAL.

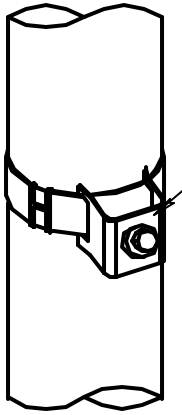

MOUNTING SIGN ON STEEL POLE

NOT TO SCALE