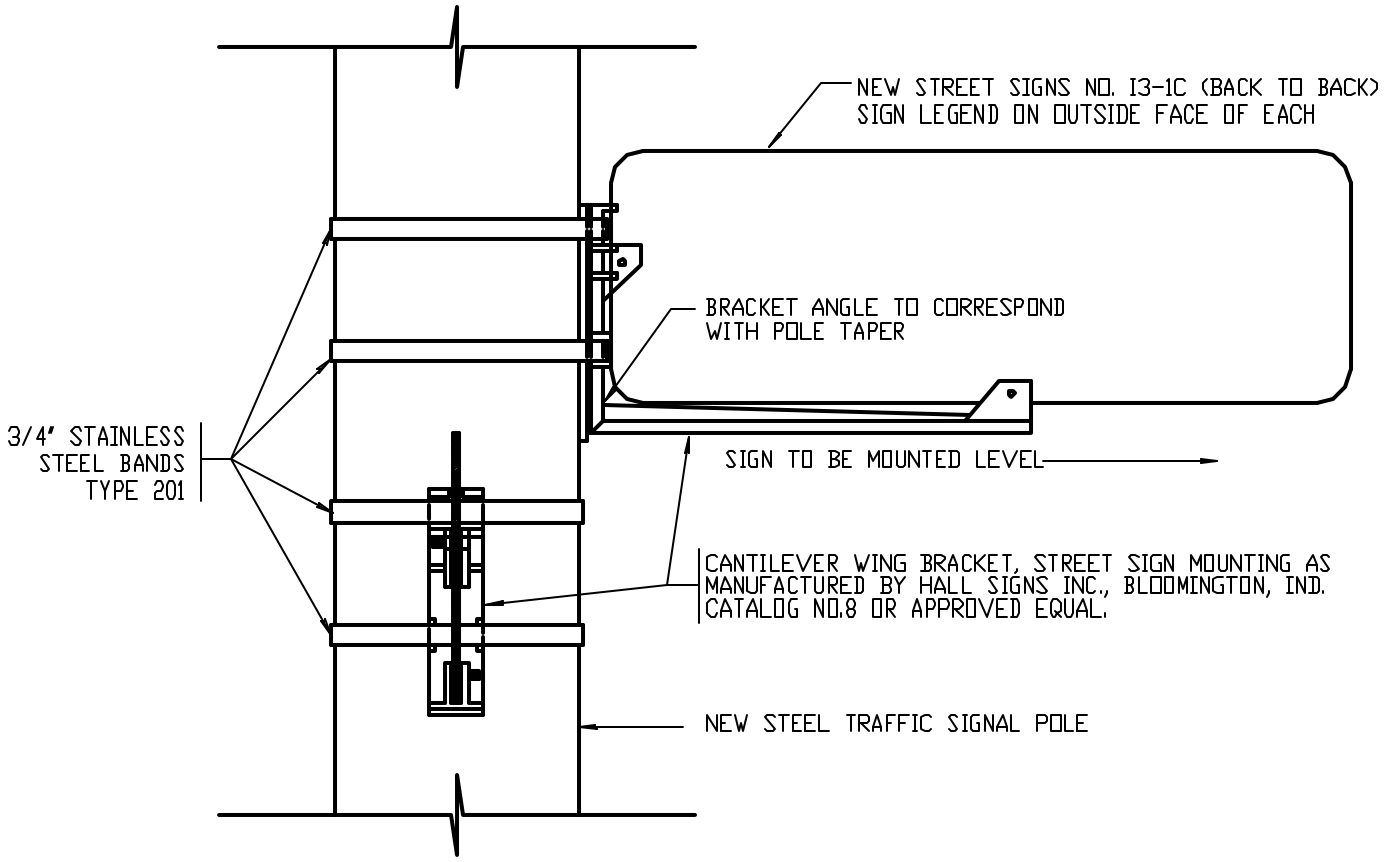

POLE MOUNTED STREET SIGN INSTALLATION

NOT TO SCALE

4/1/98

REVISED