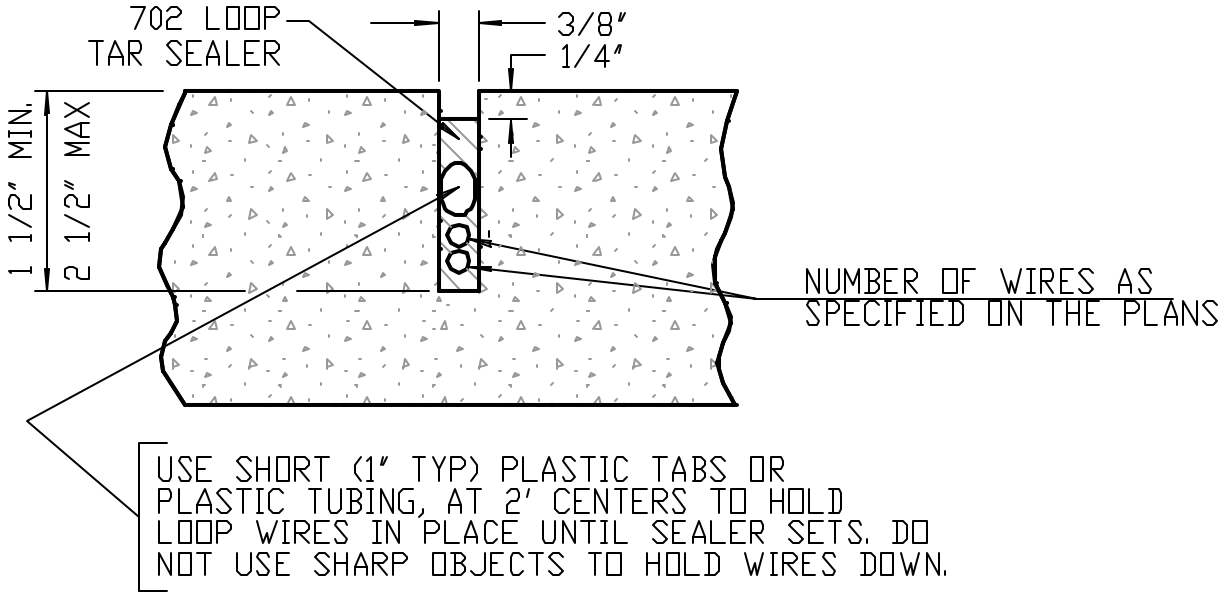

INDUCTANCE LOOP SAW CUT IN CONCRETE OR ASPHALT TOP

NOT TO SCALE

4/1/98

REVISED