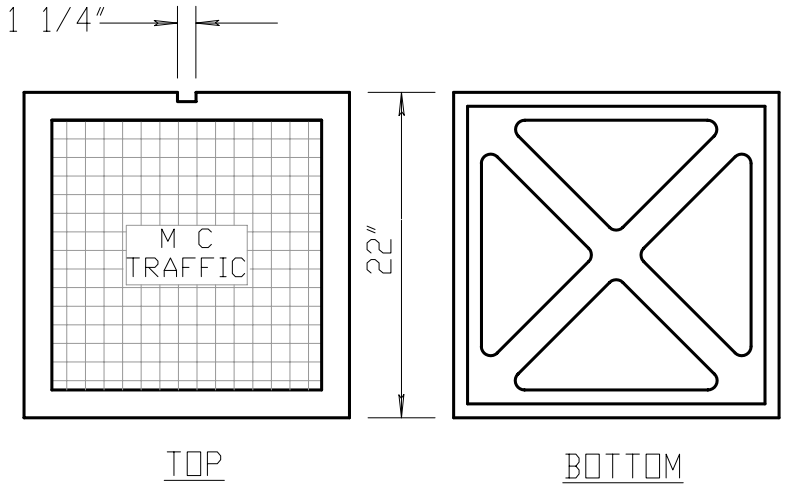

COVER

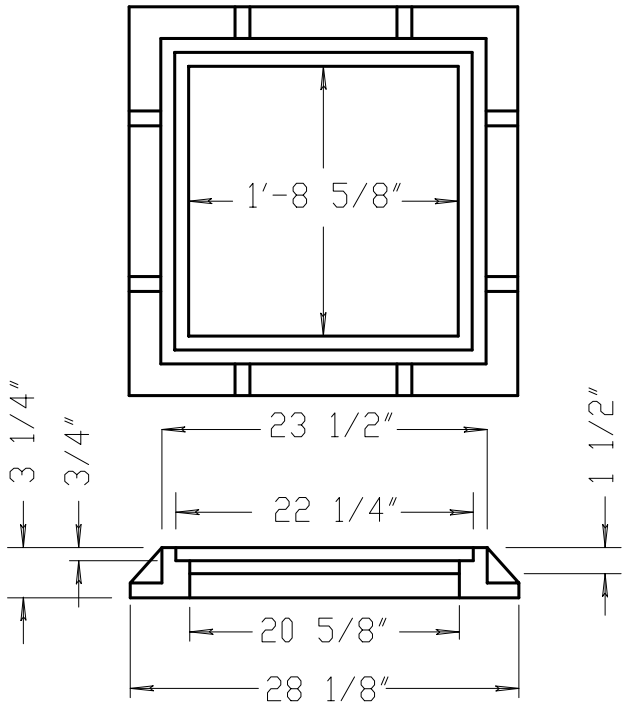

FRAME

600mm FRAME AND COVER

COVER WEIGHT = 90 LBS. (MIN)

FRAME WEIGHT = 100 LBS. (MIN)

PULL BOX - FRAME & COVER

NOT TO SCALE

7/14/00

REVISED