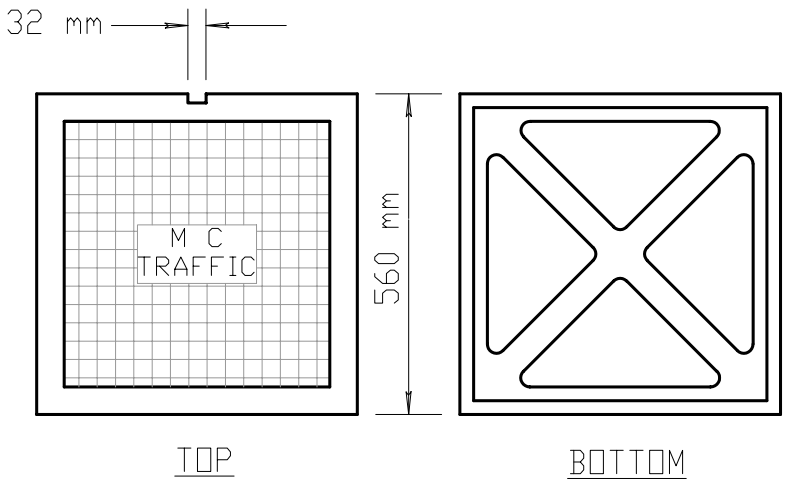

COVER

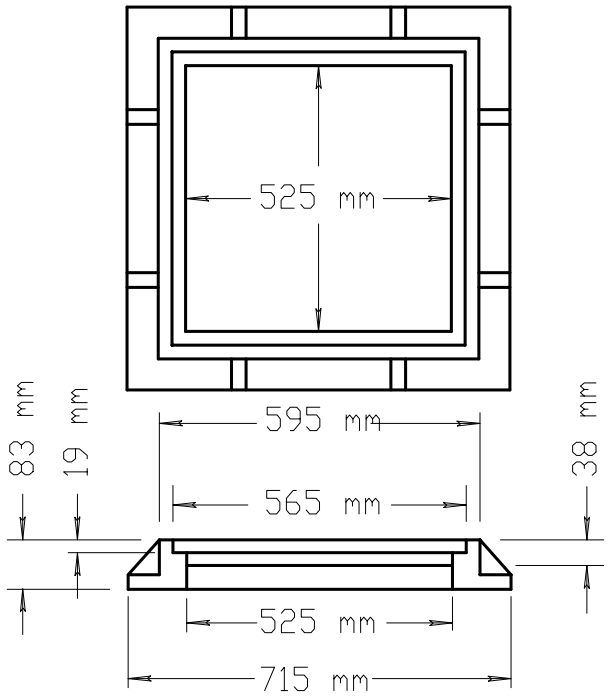

FRAME

600mm FRAME AND COVER

COVER WEIGHT = 41.0 kg (MIN)

FRAME WEIGHT = 45.5 kg (MIN)

PULL BOX - FRAME & COVER

NOT TO SCALE

7/14/00

REVISED