REVISED 4/14/00

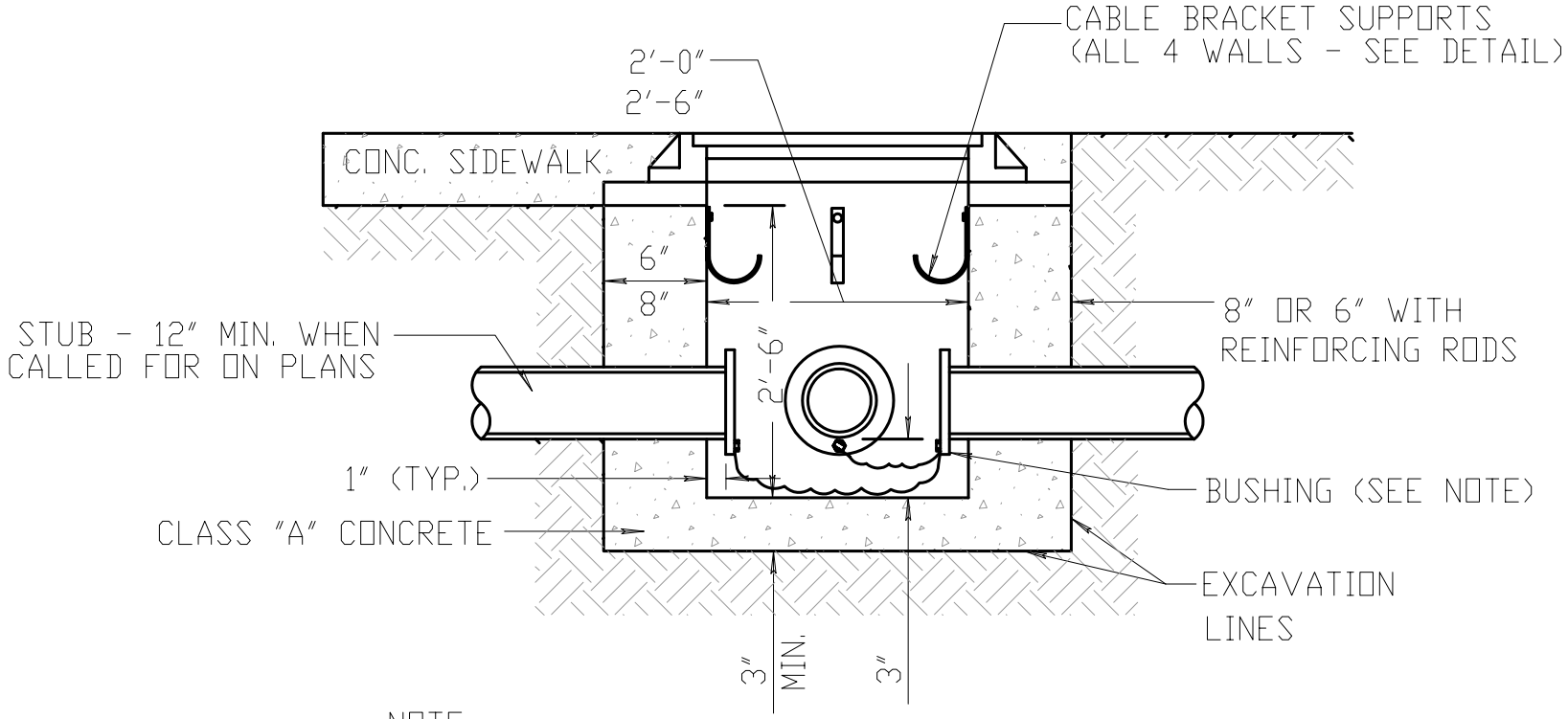

NOTE
THE INSULATED BUSHING SHALL BE METAL AND HAVE A GROUND LUG FOR #6 COPPER WIRE. ALL CONDUITS SHALL BE WIRED/GROUNDED TOGETHER WITH THE BARE #6 COPPER WIRE.

PULL BOX - SECTION IN ROCK

NOT TO SCALE