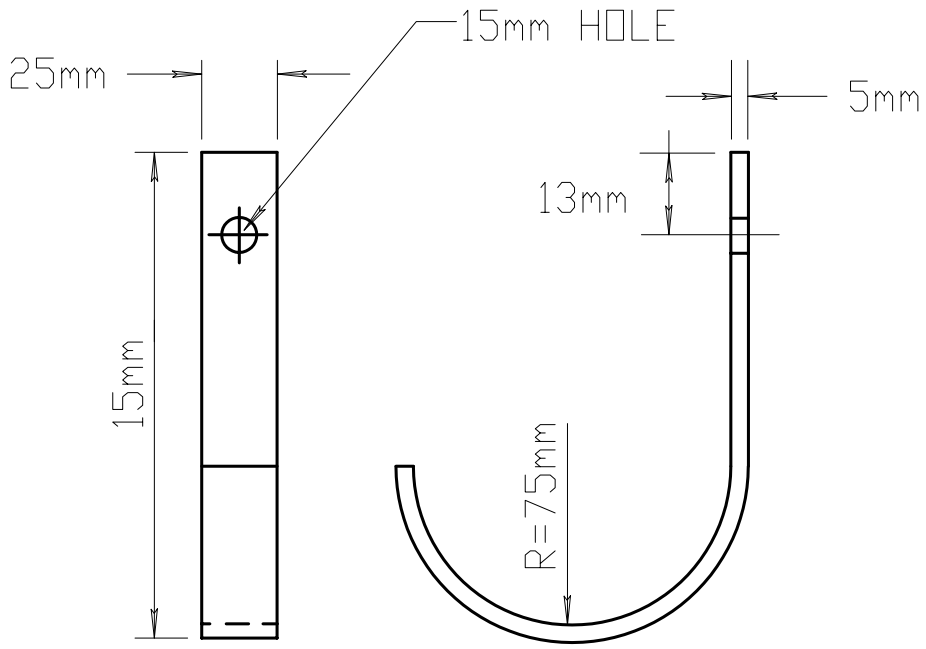

PULL BOX - STEEL CABLE BRACKET SUPPORT
(HOT DIPPED GALVANIZED)

NOT TO SCALE

4/1/98

REVISED