REVISED 4/1/98

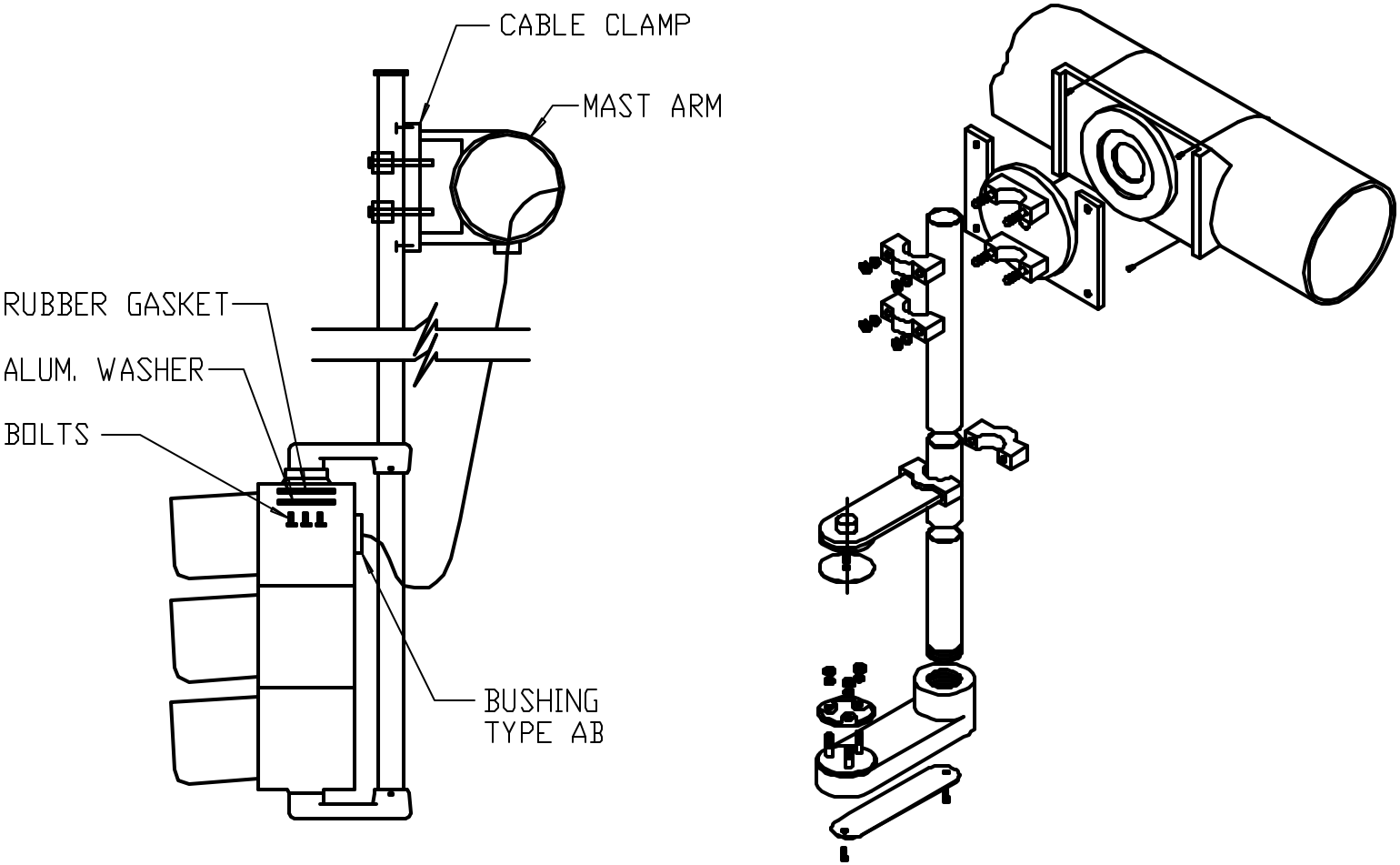

RIGID SIGNAL HEAD MOUNTING

NOT TO SCALE