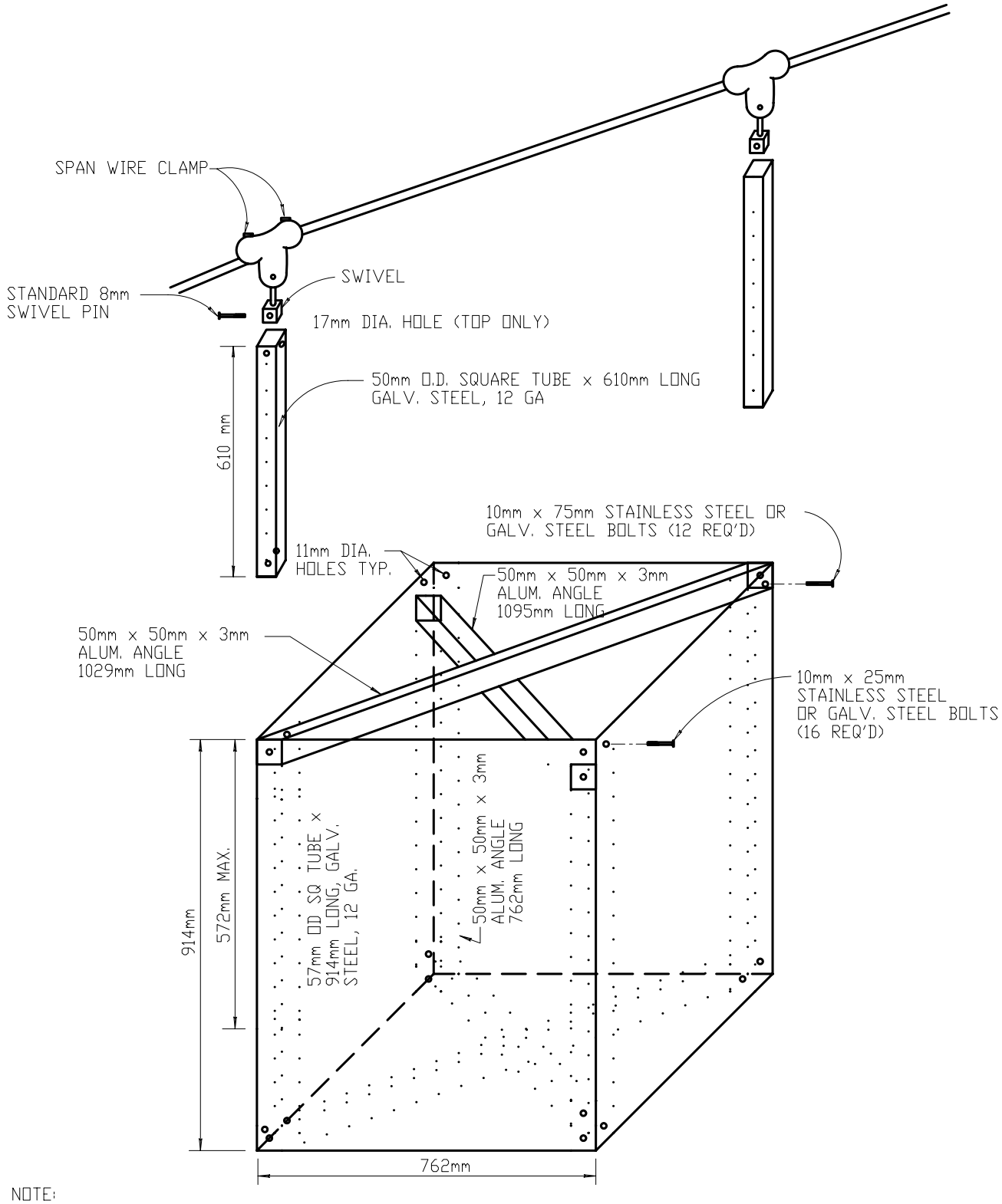

NOTE:
THIS SIGN STRUCTURE IS TO BE USED WHEN ALL FOUR LEFT TURN LANES CONVERGE AT OR NEAR SAME POINT, OR WHERE A FOUR WAY SIGN IS REQUIRED. IT MAY BE MODIFIED AS NECESSARY TO ACCOMMODATE DIFFERENT SIZES OF SIGNS.

SIGN MOUNT - TYPE B FOUR WAY

NOT TO SCALE

4/1/98

REVISED