BID PROJECT NO. 1102-12

COUNTY OF MONROE
DEPARTMENT OF TRANSPORTATION

ADDENDUM NO. 2

TO THE

CONSTRUCTION SPECIFICATIONS AND RELATED DOCUMENTS

FOR

IMPROVEMENTS TO PORTLAND

NYSDOT P.I.N. 4754.29
CIP 1488
D# 033380

TO ALL BIDDERS:

The following constitutes ADDENDUM NO. 1 of the Contract Documents. Each Bidder shall acknowledge receipt of the Addendum on Page P-5 of the Proposal.

Pages ADD 2-1 through ADD 2-4 Date: December 3, 2012

TO ALL BIDDERS:
Pages ADD 2-1 through ADD 2-4 constitutes Addendum No. 2 to the Contract Documents. Make the following changes to the Contract Specifications and Related Documents:

A. CHANGES TO THE SPECIFICATION BOOK

1. In the Proposal Book, **REPLACE** sheets P-28R with the attached P-28R2 (ADD 2-3).

   The following change was made to P-28R:

   For Item 520.50140008 the estimated quantity has been changed to 16,296 feet.

B. CHANGES TO THE CONTRACT DRAWINGS

2. In the Contract Drawings, Sheet 34 of 89, Drawing CT-1, in the SAWCUT TABLE, **DELETE** the Driveway Sawcut quantity of 1,962.8 feet. The revised total quantity is 16,296 feet. **CLARIFICATION**: Per Note 9 for the Driveway Details on Drawing MD-9, Sheet 29 of 89, the cost for sawcutting driveways shall be included in the price bid for Item 608.020102.

   A revised Contract sheet will not be issued at this time.

3. In the Contract Drawings, Sheet 36 of 89, Drawing CT-3, in the WATERMAIN SPECIALS table for Item 663.2002, **REPLACE** "KG" with "LB". **CLARIFICATION**: The weight of the fittings is measured in pounds. The weights listed in the table are in pounds.

   A revised Contract sheet will not be issued at this time.

4. In the Contract Drawings, **REPLACE** Sheet 23 of 89, with the attached Sheet 23A1 of 89 (ADD2-4).

   The following changes were made to Sheet 23 of 89:

   CLARIFICATIONS were made to the STORM SEWER WITH UNDERDAIN PIPE DETAIL and UNDERDRAIN DETAIL to better define trench width and pay limits for excavation and backfill. In areas where storm sewer is to be installed adjacent to the curb, the boxout excavation shall be paid for per the STORM SEWER WITH UNDERDRAIN PIPE DETAIL using Item 206.04. In areas where there is no storm sewer adjacent to the curb, the boxout excavation shall be paid for using Item 203.02 per the typical sections.

   DELETED the CONCRETE GUTTER WITH PERFORATED STORM SEWER detail. This detail is not applicable.

   A revised Contract sheet is issued with this addendum.

BID OPENING DATE REMAINS DECEMBER 7, 2012 AT 11:00 AM

IMPROVEMENTS TO PORTLAND AVENUE - ROCHESTER CITY LINE TO TITUS AVENUE
MONROE COUNTY, NEW YORK
PIN 4754.29

ADD 2-3

PROPOSAL

P-28R2

ITEM NUMBER	ITEM DESCRIPTION	ESTIMATED QUANTITY	UNIT BID PRICE IN WORDS	UNIT BID PRICE IN FIGURES		AMOUNT BID IN FIGURES	
				Dollars	Cents	Dollars	Cents
402.378912	Plant Production Quality Adjustment to 402.378902	109 QU	Sixty Five DOLLARS & Zero CENTS	65	00	7,085	00
407.0101	Tack Coat	3,168 GA	DOLLARS & CENTS				
490.10	Production Cold Milling of Bituminous Concrete	20,375 SY	DOLLARS & CENTS				
490.30	Miscellaneous Cold Milling of Bituminous Concrete	4,470 SY	DOLLARS & CENTS				
520.50140008	Sawcut Pavement	16,296 FT	DOLLARS & CENTS				
552.16	Excavation Protection System	3,321 SY	DOLLARS & CENTS				
603.6001	Reinforced Concrete Pipe Class III, 12" Diameter	704 FT	DOLLARS & CENTS				
			Total This Page:				

THIS SHEET SUPERSEDES SHEET 23 OF 89

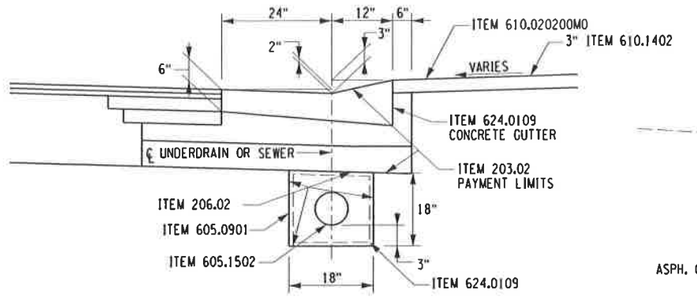

UNDERDRAIN DETAIL - WITH CONCRETE GUTTER

N.T.S.

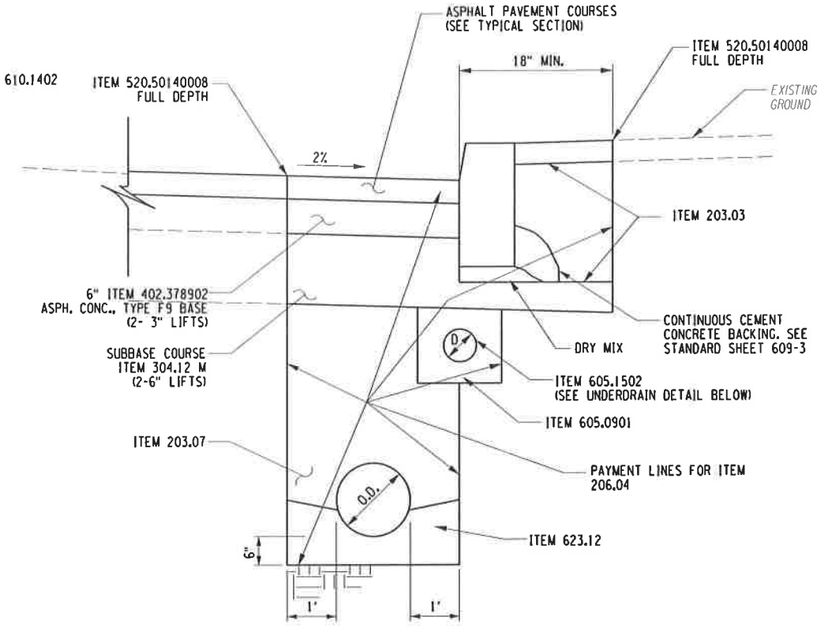

STORM SEWER WITH UNDERDRAIN PIPE DETAIL

N.T.S.

NOTE:

REFER TO SPECIFIC TRENCH DETAILS FOR VARIOUS UTILITY INSTALLATIONS.

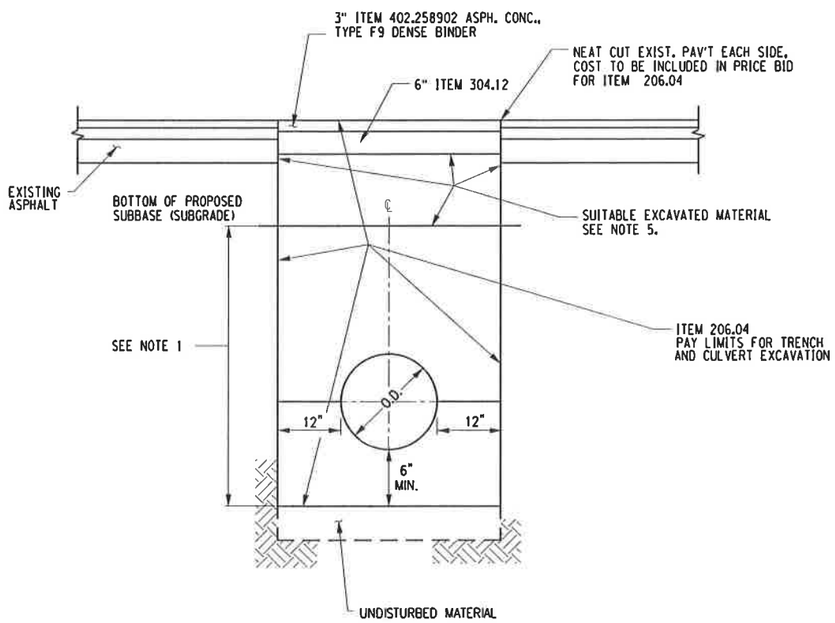

TEMPORARY TRENCH RESTORATION IN PAVED AREA

N.T.S.

NOTES:

1. REFER TO SPECIFIC TRENCH DETAILS FOR VARIOUS UTILITY INSTALLATIONS.
2. BACKFILL TRENCH PER SPECIFIC TRENCH DETAILS FOR VARIOUS UTILITY INSTALLATIONS TO BOTTOM OF BINDER COURSE.
3. SUITABLE EXCAVATED MATERIAL SHALL BE PLACED AND COMPACTED AS SHOWN. COST TO BE INCLUDED IN PRICE BUD FOR ITEM 206.04.

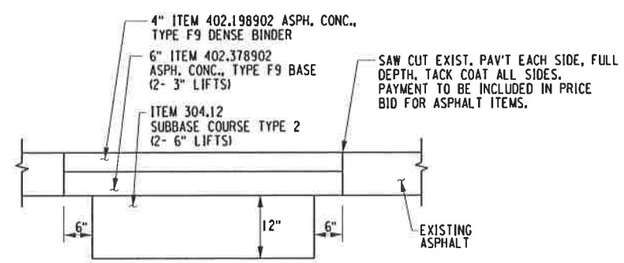

PERMANENT TRENCH RESTORATION IN PAVED AREA

N.T.S.

NOTES:

1. REMOVE TEMPORARY PAVEMENT UNDER ITEM 203.02.
2. REFER TO SPECIFIC TRENCH DETAILS FOR VARIOUS UTILITY INSTALLATIONS.

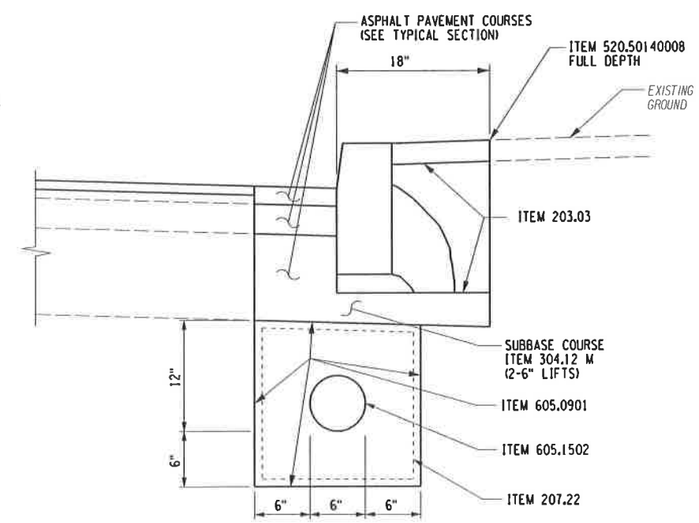

UNDERDRAIN DETAIL - WITH CURB

N.T.S.

NO.	DATE	BY	REVISION

LABELLA Associates, P.C.
300 STATE STREET
ROCHESTER, NY 14614
P: (585) 454-6110
F: (585) 454-3066

PROJECT MANAGER: W. DALEY
DRAWN BY: C. NORRIS

DEPARTMENT OF TRANSPORTATION
50 WEST MAIN STREET, SUITE 6100
ROCHESTER, NEW YORK 14614-1231

UNAUTHORIZED ALTERATION OR ADDITION TO THIS DRAWING IS A VIOLATION OF THE LAW OF THE STATE OF NEW YORK STATE EDUCATION LAW ARTICLE 145, SECTION 7209

COUNTY ROAD 114
PROJECT NAME: PORTLAND AVENUE
LIMITS: PORTLAND PARKWAY TO TITUS AVENUE
TOWN: IRONDEQUOIT, MONROE COUNTY
CAPITAL PROJECT NO.: XXXX
NYSDOT P.I.N.: 4754.29

MISCELLANEOUS DETAILS

SCALE: NO SCALE
DATE ISSUED: NOV 2012
DRAWING NO. MD-3R
23 A1 OF 89

FILE NAME = 209627_cph_msd.dgn
DATE/TIME = 12/3/2012 10:50:42 AM