# MONROE COUNTY
# BID PROPOSAL

**Division of Purchasing**
**County Office Building, Room 200**
**39 West Main Street**
**Rochester, NY 14614**
**(585) 753-1100**

**BID PROJECT NUMBER:** 0313-12

**BID TITLE:** PRECAST CONCRETE STRUCTURES, RISERS & COVERS

**BUYER:** Sharon A. Berndt

**BID TIME:** 2:00 PM

**PHONE:** (585) 753-1110

**BID DATE:** March 28, 2012

**BID SECURITY REQUIRED:** **No: X**
**Yes, in the amount of ___ as specified herein**

| ITEM AND/OR GROUP NO. | ESTIMATED ANNUAL QUANTITY | ARTICLES OR SERVICES | UNIT PRICE | EXTENSION |
|---|---|---|---|---|
| | | PRECAST CONCRETE STRUCUTRES, RISERS & COVERS<br>Per attached specifications<br><br>**TOTAL BID from the Unit Price Sheet**<br><br>*PLEASE SUBMIT TWO (2) COPIES OF BID PROPOSAL AT TIME OF BID OPENING.* | | $_____ |

**I have received, read and agree to the terms and conditions as set forth in General Terms and Conditions, Monroe County, attached, and any special terms and conditions set forth in the General and Technical Specifications herein. I have read, understand and agree to all Instructions to Bidders (including the Non-Collusion Bidding Certification) on the reverse hereof. I hereby recognize and agree that upon execution of this document by an authorized officer of Monroe County, that this document, together with the Contractor's bid as accepted by Monroe County and all other documents prepared by or on behalf of Monroe County for this bid solicitation, shall become the binding contract between the parties for the services to be provided in accordance with the terms and conditions set forth herein.**

**FIRM NAME** _____ **SIGNED BY** _____

**ADDRESS** _____ **PRINTED NAME** _____

_____ **TITLE** _____

**FEDERAL ID NO.** _____ **PHONE NO.** _____

**E-MAIL ADDRESS** _____ **FAX NO.** _____

**BID ACCEPTANCE AND CONTRACT AWARD**

**The above bid is accepted, except as noted, and the contract is awarded to you for the following item(s):**

_____

**Authorization to furnish supplies/services will be made via Purchase Order, as appropriate, signed by the Monroe County Purchasing Manager, or designated agent. Contract period from _____ to _____.**

**Date:** _____ **BY:** _____

**Dawn C. Staub, Purchasing Manager, Monroe County**

# INSTRUCTIONS TO BIDDERS

- **All public bids must be submitted to purchasing in sealed envelopes which clearly identify the bid project number and the title of the service/product being bid. Any other writing on the envelope, with the exception of Company logos, etc. may result in bids being misplaced and otherwise rejected.**

- **Unsigned bids may be rejected as informal.**

- **Questions regarding ambiguities or the propriety of these specifications should be addressed, in writing, to the Buyer, prior to the formal bid opening. Such questions will not be entertained after said bid opening.**

- **Where a Bid Security is indicated on the face of the proposal, the security must be attached to the Proposal as an earnest of good faith. In this case, any bid without a bid security may be rejected as informal.**

**The Purchasing Manager reserves the right to reject any and all bids, to waive any informality in the bids and to make awards in the best interest of Monroe County.**

**NON-COLLUSION BIDDING CERTIFICATION**

**By submission of this bid, each bidder and each person signing on behalf of any bidder, certifies and in the case of a joint bid, each party thereto certifies as to its own organization, under penalty of perjury, that to the best of knowledge and belief:**

1. **The prices in this bid have been arrived at independently without collusion, consultation, communication, or agreement, for the purpose of restricting competition, as to any matter relating to such prices with any other bidder or with any competitor.**

2. **Unless otherwise required by law, the prices, which have been quoted in its bid, have not been knowingly disclosed by the bidder and will not knowingly be disclosed by the bidder prior to opening, directly or indirectly, to any other bidder or to any competitor.**

3. **No attempt has been made or will be made by the bidder to induce any other person, partnership or corporation to submit a bid for the purpose of restricting competition.**

***CERTIFICATION REGARDING***
***DEBARMENT, SUSPENSION AND RESPONSIBILITY***

The undersigned certified, to the best of his/her knowledge and belief, that the Contractor and its principals:

1. Are not presently debarred, suspended, proposed for debarment, declared ineligible or voluntarily excluded by any Federal department or agency;

2. Have not within a three-year period preceding this transaction/application/ proposal/contract/agreement been convicted of or had a civil judgment rendered against them for commission of fraud or a criminal offense in connection with obtaining, attempting to obtain or performing a public (Federal, State or local) transaction or contract under a public transaction; violation of Federal or State antitrust statutes or commission of embezzlement, theft, forgery, bribery, falsification or destruction or records, making false statements or receiving stolen property;

3. Are not presently indicted for or otherwise criminally or civilly charged by a governmental entity (Federal, State or local) with commission of any of the offenses enumerated in paragraph 2 of this certification and;

4. Have not within a three-year period preceding this transaction/application/ proposal/contract/agreement had one or more public transactions (Federal, State or local) terminated for cause or default.

Date: _____ _____
[Print Name of Contractor]

By: _____
[Signature]

_____
[Print Name]

_____
[Print Title/Office]

**VENDOR MUST COMPLETE THIS FORM AND SUBMIT WITH BID.**

## TERMS AND CONDITIONS

| | |
|---|---|
| **BID ITEM:** | **PRECAST CONCRETE STRUCTURES, RISERS & COVERS** |
| **FOR:** | **Department of Transportation** |
| **DEPARTMENT CONTACT:** | **Timothy Frelier, (585) 753-7731** |
| **DUPLICATE COPIES:** | **PLEASE SUBMIT YOUR BID IN DUPLICATE; THE ORIGINAL AND ONE (1) COPY.** |
| **BID INFORMATION:** | At the time of bid, the bidder shall supply detailed specifications covering the item(s) contained herein and shall clearly indicate any areas in which item or items offered do not fully comply with the specifications contained herein. |
| **SUBMITTAL OF FORMAL PROPOSAL:** | Bid proposal must be legible and submitted in the original form, bearing an original signature. **EMAILS AND FACSIMILES ARE NOT ACCEPTABLE.**<br><br>All bidders must submit proof that they have obtained the required **Workers' Compensation** and **disability benefits** coverage or proof that they are exempt. |
| **SPECIFICATION ALTERATIONS:** | Specifications will be construed to be complete and be considered the entire description of the goods or services upon which Monroe County is now seeking bids. **Only formal written addenda can materially alter this set of specifications**. No verbal statement made by a Monroe County employee or anyone else is binding nor shall such statement be considered an official part of this public bid proposal. |
| **QUANTITIES:** | The quantities listed are the estimated annual requirements and should not be construed to represent either maximum or minimum quantities to be ordered during the contract term. |
| **BRAND REFERENCE:** | References to a manufacturer's product by brand name or number are done solely to establish the minimum quality and performance characteristics required. Bidders may submit bids on alternates, but must attach two (2) copies of manufacturer specifications for any alternate at the time of the bid. Further, the bidder must demonstrate that the alternate proposed has a sufficient operating track record to show the equipment will perform per the specified brand. The acceptance of a bidder's alternate rests solely with Monroe County. |

**QUALIFIED BIDDER:** Each bidder must be prepared to present satisfactory proof of his capacity and ability to perform this contract. Such proof may include, but is not limited to, an inspection of the bidder's facilities and equipment, financial statements, references and performance of similar contracts. **The Purchasing Manager reserves the right to reject any bid where the bidder cannot satisfy the County as to their ability to perform.** Monroe County reserves the right to reject any and all bids if the Monroe County Purchasing Manager deems said action to be in the best interests of Monroe County.

**METHOD OF AWARD:** Monroe County intends to award the bid to the lowest responsive and responsible bidder, based on the **TOTAL BID. Bidder must bid on all items in order to be considered. The County reserves the right to reject any and all bids** if the Purchasing Manager deems said action to be in the best interest of the County.

**CONTRACT TERM:** Contract will start with the date of the contract award and run through **April 30, 2013**, with the option to renew the contract up to four (4) additional twelve (12) month periods with the mutual consent of both parties.

**PRICE CHANGES:** Price changes may be proposed by either party no later than forty-five (45) days prior to contract extension, based upon manufacturer price changes which must be supported with documentation. Should price changes not be acceptable to both parties, the contract will not be extended. Prices may change only at the time of extension.

**MINIMUM ORDER:** No minimum order is specified for this contract. Agencies must be able to order as needed. **Political subdivisions and others authorized by law may participate in this contract**.

**DELIVERY:** All deliveries to be F.O.B. Monroe County to agency as specified by a Purchase Order. Delivery costs must be built into the unit prices bid. Deliveries must be made within **fourteen (14) days [sixty (60) days** for Pre-Cast Concrete Cover for Drop Inlet**]** after receipt of purchase order number. The County reserves the right to terminate the contract in the event the specified delivery time is not met.

**PURCHASE ORDER ISSUANCE:** Delivery of services may be directed by the receipt of a Purchase Order only. **Items that are not part of this bid will not be paid for by Monroe County**. As to all purchase orders issued by Monroe County, exceptions may only be authorized, in writing, by the Purchasing Manager or her authorized agent prior to delivery.

**BILLING PROCEDURE:** All invoices for items sold any authorized agency as a result of this contract must be billed in the following manner: Purchase Order #, Quantity, Description of Item Purchased, BP#, Item #, Extension and Total. **ALL INVOICES MUST BE MARKED WITH THE PURCHASE ORDER NUMBER. INVOICES WITHOUT THIS INFORMATION WILL NOT BE PROCESSED FOR PAYMENT.**

**WARRANTY/ GUARANTEE:** All warranties by manufacturer shall apply. Bidder shall, as part of its proposal, furnish its warranty/guarantee for all goods/services to be furnished hereunder. As a minimum, Bidder shall warrant all goods for a period of one (1) year from date of acceptance. Bidder shall be obligated to repair or replace all defects in material or workmanship, which are discovered or exist during said period. All labor, parts and transportation shall be at Bidder's expense.

**UNCONTEMPLATED PURCHASES:** Monroe County reserves the right to request separate bids for such quantities of items on this contract that may be best procured via separate public bid offering and to otherwise act in furthering its own best interests.

**SUBCONTRACT:** The Contractor shall not subcontract any work without first obtaining the written consent of the Monroe County Purchasing Manager.

**RELATED ITEMS:** The County reserves the right to add miscellaneous related items to this contract during the contract term upon agreement by both parties as to the price. Approval must be given in writing by the Purchasing Manager or her Designee.

**REPORT OF PURCHASE:** The Contractor must, upon request, provide the County Purchasing Manager with detailed information showing how much of each item was delivered to any and all agencies under this contract. This includes deliveries to not only the County but any other municipality or agency which orders from this contract.

**OTHER AGENCIES:** The Contractor(s) **must** honor the prices, terms and conditions of this contract with political subdivisions or districts located in whole or in part within Monroe County. In addition, the contractor **may**, but is not required to, extend the prices, terms and conditions of this contract to any political subdivision or district located in New York State. Usage of this contract by any of these other political subdivisions or districts will have to be coordinated between that subdivision or district and the contractor. Orders placed against this contract between any subdivision or district will be contracts solely between the Contractor(s) and those entities. Monroe County will not be responsible for, nor will it have any liability or other obligation for, such contract between the Contractor(s) and any third party.

**INDEMNIFICATION:** The Contractor agrees to defend, indemnify and save harmless the County, its officers, agents, servants and employees from and against any and all liability, damages, costs or expenses, causes of action, suits, judgments, losses and claims of every name not described, including attorneys' fees and disbursements, brought against the County which may arise, be sustained or occasioned directly or indirectly by any person, firm or corporation arising out of or resulting from the performance of the services by the Contractor, arising from any act, omission or negligence of the Contractor, its agents and employees or arising from any breach or default by the Contractor under this Agreement. Nothing herein is intended to relieve the County from its own negligence or misfeasance or to assume any such liability for the County by the Contractor.

## INSURANCE REQUIREMENTS
## INDEMNIFICATION

The Contractor shall procure and maintain at his own expense until final completion of the work covered by the Contract, insurance for liability for damages imposed by law of the kinds and in the amounts hereinafter provided, issued by insurance companies authorized to do business in the State of New York, covering all operations under the Contract whether performed by the Contractor or by his subcontractors. Monroe County must be named as Additional Insured on all policies.

Within ten (10) days after notice of award, the Contractor shall furnish to the County a certificate or certificates of insurance in a form satisfactory to the Monroe County Attorney (a sample form is attached to these specifications) showing that he has complied with all insurance requirements set forth herein, which certificate or certificates shall provide that the policies shall not be changed or canceled until thirty (30) days written notice has been given to the County. Except for Workers' Compensation Insurance, no insurance required herein shall contain any exclusion of municipal operations performed in connection with the Contract resulting from this bid solicitation. The kinds and amounts of insurance are as follows:

A. **WORKERS' COMPENSATION AND DISABILITY INSURANCE:** A policy covering the operations of the Contractor in accordance with the provisions of Chapter 41 of the Laws of 1914, as amended, known as the Workers' Compensation Law, covering all operations under Contract, whether performed by him or by his subcontractors. The Contract shall be void and of no effect unless the person or corporation making or executing same shall secure compensation coverage for the benefits of and keep insured during the life of said Contract, such employees in compliance with the provisions of the Workers' Compensation Law know as the Disability Benefits Law (Chapter 600 of the Laws of 1949) and amendments hereto.

B. **LIABILITY AND PROPERTY DAMAGE INSURANCE:**

(1) CONTRACTOR'S GENERAL LIABILITY INSURANCE issued to the Contractor and covering the liability for damages imposed by law upon the Contractor with respect to all work performed by him under the within Contract. All of the following coverages shall be included:

Comprehensive Form
Premises-Operations
Products/Completed Operations
Contractual Insurance covering the Hold Harmless Provision
Broad Form Property Damage
Independent Contractors
Personal injury

(2) Unless otherwise specifically required by special specifications, each policy shall have limits of not less than the following:

| BODILY INJURY LIABILITY | PROPERTY DAMAGE LIABILITY | AGGREGATE |
|---|---|---|
| Each Occurrence | Each Occurrence | |
| $1,000,000 | $1,000,000 | $3,000,000 |

C. **MOTOR VEHICLE INSURANCE** issued to the Contractor and covering public liability and property damage on the Contractor's vehicles in the amount of:

| BODILY INJURY LIABILITY | PROPERTY DAMAGE LIABILITY | AGGREGATE |
|---|---|---|
| Each Occurrence | Each Accident | |
| $1,000,000 | $1,000,000 | $3,000,000 |

A sample insurance certificate is included with these specifications. All categories and amounts of insurance required for this bid project have been checked off on the sample. These are the minimum requirements that the Contractor must supply. Failure to supply a satisfactory certificate within ten (10) days after receipt of Notice of Award may result in the cancellation of the award.

# ACORD™ CERTIFICATE OF LIABILITY INSURANCE

DATE (MM/DD/YYYY)

**PRODUCER**

**THIS CERTIFICATE IS ISSUED AS A MATTER OF INFORMATION ONLY AND CONFERS NO RIGHTS UPON THE CERTIFICATE HOLDER. THIS CERTIFICATE DOES NOT AMEND, EXTEND OR ALTER THE COVERAGE AFFORDED BY THE POLICIES BELOW.**

**INSURED**

| INSURERS AFFORDING COVERAGE | NAIC # |
|---|---|
| INSURER A: | |
| INSURER B: | |
| INSURER C: | |
| INSURER D: | |
| INSURER E: | |

## COVERAGES

THE POLICIES OF INSURANCE LISTED BELOW HAVE BEEN ISSUED TO THE INSURED NAMED ABOVE FOR THE POLICY PERIOD INDICATED. NOTWITHSTANDING ANY REQUIREMENT, TERM OR CONDITION OF ANY CONTRACT OR OTHER DOCUMENT WITH RESPECT TO WHICH THIS CERTIFICATE MAY BE ISSUED OR MAY PERTAIN, THE INSURANCE AFFORDED BY THE POLICIES DESCRIBED HEREIN IS SUBJECT TO ALL THE TERMS, EXCLUSIONS AND CONDITIONS OF SUCH POLICIES. AGGREGATE LIMITS SHOWN MAY HAVE BEEN REDUCED BY PAID CLAIMS.

| INSR LTR | ADD'L INSRD | TYPE OF INSURANCE | POLICY NUMBER | POLICY EFFECTIVE DATE (MM/DD/YYYY) | POLICY EXPIRATION DATE (MM/DD/YYYY) | LIMITS | |
|---|---|---|---|---|---|---|---|
| | | GENERAL LIABILITY | | | | EACH OCCURRENCE | $ 1,000 |
| | | X COMMERCIAL GENERAL LIABILITY | | | | DAMAGE TO RENTED PREMISES (Ea occurrence) | $ |
| | | CLAIMS MADE X OCCUR | | | | MED EXP (Any one person) | $ |
| | | | | | | PERSONAL & ADV INJURY | $ |
| | | | | | | GENERAL AGGREGATE | $ 3,000 |
| | | GEN'L AGGREGATE LIMIT APPLIES PER: | | | | PRODUCTS-COMP/OP AGG | $ |
| | | POLICY X PROJECT LOC | | | | | |
| | | AUTOMOBILE LIABILITY | | | | COMBINED SINGLE LIMIT (Ea accident) | $ 3,000 |
| | | ANY AUTO | | | | | |
| | | X ALL OWNED AUTOS | | | | BODILY INJURY (Per person) | $ 1,000 |
| | | SCHEDULED AUTOS | | | | | |
| | | X HIRED AUTOS | | | | BODILY INJURY (Per accident) | $ 1,000 |
| | | X NON-OWNED AUTOS | | | | | |
| | | | | | | PROPERTY DAMAGE (Per accident) | $ 1,000 |
| | | GARAGE LIABILITY | | | | AUTO ONLY – EA ACCIDENT | $ |
| | | ANY AUTO | | | | OTHER THAN AUTO ONLY: EA ACC | $ |
| | | | | | | AGG | $ |
| | | EXCESS/UMBRELLA LIABILITY | | | | EACH OCCURRENCE | $ |
| | | OCCUR CLAIMS MADE | | | | AGGREGATE | $ |
| | | | | | | | $ |
| | | DEDUCTIBLE | | | | | $ |
| | | RETENTION $ | | | | | $ |
| | | WORKERS COMPENSATION AND EMPLOYERS' LIABILITY | | | | WC STATUTORY LIMITS / OTHER | |
| | | ANY PROPRIETOR/PARTNER/EXECUTIVE OFFICER/MEMBER EXCLUDED? | | | | E.L. EACH ACCIDENT | $ |
| | | If yes, describe under SPECIAL PROVISIONS below | INSERT # | | | E.L. DISEASE-EA EMPLOYEE | $ |
| | | | | | | E.L. DISEASE-POLICY LIMIT | $ |
| | | OTHER | | | | | |

DESCRIPTION OF OPERATIONS / LOCATIONS / VEHICLES / EXCLUSIONS ADDED BY ENDORSEMENT / SPECIAL PROVISIONS

REFER TO BID PROJECT #0313-12 PRECAST CONCRETE STRUCTURES, RISERS & COVERS

**COUNTY MUST BE NAMED AS ADDITIONAL INSURED.**

CERTIFICATE HOLDER

County of Monroe
Department of Purchasing
39 West Main Street, Room 200
Rochester, NY 14614
Attn: Sharon A. Berndt

SHOULD ANY OF THE ABOVE DESCRIBED POLICIES BE CANCELLED BEFORE THE EXPIRATION DATE THEREOF, THE ISSUING INSURER WILL ENDEAVOR TO MAIL 30 DAYS WRITTEN NOTICE TO THE CERTIFICATE HOLDER NAMED TO THE LEFT, BUT FAILURE TO DO SO SHALL IMPOSE NO OBLIGATION OR LIABILITY OF ANY KIND UPON THE INSURER, ITS AGENTS OR REPRESENTATIVES.

AUTHORIZED REPRESENTATIVE

ACORD 25 (2001/08)

© ACORD CORPORATION 1988

## IMPORTANT

If the certificate holder is an ADDITIONAL INSURED, the policy(ies) must be endorsed. A statement on this certificate does not confer rights to the certificate holder in lieu of such endorsement(s).

If SUBROGATION IS WAIVED, subject to the terms and conditions of the policy, certain policies may require an endorsement. A statement on this certificate does not confer rights to the certificate holder in lieu of such endorsement(s).

### DISCLAIMER

The Certificate of Insurance on the reverse side of this form does not constitute a contract between the issuing insurer(s) representative or producer, and the certificate holder, nor does it affirmatively or negatively amend, extend or alter the coverage afforded by the policies listed thereon.

## NOTICE OF JOB VACANCIES

a) The contractor recognizes the continuing commitment on the part of Monroe County to assist those receiving temporary assistance to become employed in jobs for which they are qualified and the County's need to know when jobs become available in the community.

b) The contractor agrees to notify the County when the contractor has or is about to have a job opening for a full time position within Monroe County or any contiguous county. Such notice shall be given as soon as practicable after the contractor has knowledge that a job opening will occur. The notice shall contain information that will facilitate the identification and referral of appropriate candidates in a form and as required by the Employment Coordinator. This would include at least a description of conditions for employment, including the job title and information concerning wages, hours per work week, location and qualifications (education and experience).

c) Notice shall be given in writing to:

Employment Coordinator
Monroe County Department of Human and Health Services
Rm 535
691 St. Paul St.
Rochester, NY 14605
Telephone: (585) 753-6322
Fax: (585) 753-6308

d) The contractor recognizes that this is an opportunity to make a good faith effort to work with Monroe County for the benefit of the community. Nothing contained in this provision, however, shall be interpreted as an obligation on the part of the contractor to employ any individual who may be referred by or through the County for job openings as a result of the above notice. Any decisions made by the contractor to hire any individual referred by or through the County shall be voluntary and based solely upon the contractor's job requirements and the individual's qualifications for the job, as determined by the contractor.

e) If the contractor is a local municipality within Monroe County, said municipality shall be subject to the above subparagraphs, except that said municipalities shall not be required to give notice where the position is subject to a published civil service list.

## COMPLIANCE WITH FEDERAL SINGLE AUDIT ACT

In the event the Contractor is a recipient through this contract, directly or indirectly of any funds of or from the United States Government, Contractor agrees to comply fully with the terms and requirements of Federal Single Audit Act [Title 31 United States Code, Chapter 75], as amended from time to time. The Contractor shall comply with all requirements stated in Federal Office of Management and Budget Circulars A-102, A-110 and A-133 and such other circulars, interpretations, opinions, rules or regulations that may be issued in connection with the Federal Single Audit Act.

If on a cumulative basis the Contractor expends Five Hundred Thousand and no/100 Dollars ($500,000.00) or more in federal funds in any fiscal year, it shall cause to have a single audit conducted, the Data Collection Form (defined in Federal Office of Management and Budget Circular A-133) shall be submitted to the County; however, if there are findings or questioned costs related to the program that is federally funded by the County, the Contractor shall submit the complete reporting package (defined in Federal Office of Management and Budget Circular A-133) to the County.

If on a cumulative basis the Contractor expends less than Five Hundred Thousand and no/100 Dollars ($500,000.00) in federal funds in any fiscal year, it shall retain all documents relating to the federal programs for three (3) years after the close of the Contractor's fiscal year in which any payment was received from such federal programs.

All required documents must be submitted within nine (9) months of the close of the Contractor's fiscal year end to:

Monroe County Internal Audit Unit
304 County Office Building
39 West Main Street
Rochester, New York 14614

The Contractor shall, upon request of the County, provide the County such documentation, records, information and data and response to such inquiries as the County may deem necessary or appropriate and shall fully cooperate with internal and/or independent auditors designated by the County and permit such auditors to have access to, examine and copy all records, documents, reports and financial statements as the County deems necessary to assure or monitor payments to the Contractor under this contract.

The County's right of inspection and audit pursuant to this contract shall survive the payment of monies due to Contractor and shall remain in full force and effect for a period of three (3) years after the close of the Contractor's fiscal year in which any funds or payment was received from the County under this contract.

**ITEM PRECAST CONCRETE DRAINAGE UNITS (TYPE A & S)**:

**DESCRIPTION:**

Provide precast drainage inlets of the sizes and configurations as listed in the specification.

**MATERIAL REQUIREMENT:**

The material requirements shall be as specified in Section 706-04 of the New York State Specifications as shown on the NYSDOT standard sheets 604 Series and in the attached MCDOT detail.

MCDOT Type A Precast Concrete 24" X 24" inside dimensions with knockouts as required, and 21, 24", 30",and 36" inside depth as required.

NYSDOT Type S Precast Concrete 24" X 32" inside dimensions with knockouts as required, and 24", 30", and 36" inside depth as required.

**Both types precast concrete drainage units shall be fully coated (interior and exterior) with two coats of Koppers super service black bituminous coating or equal.**

**BASIS OF BID:**

The unit price bid shall be for each, including all cost of furnishing and delivering the unit F.O.B. to any point in Monroe County within 14 days of receipt of order.

**BASIS OF PAYMENT:**

Payment will be made under:

| Description | Pay Unit |
|---|---|
| MCDOT Type A Precast Concrete Drainage Unit (24"x 24"x 21" ID) | Ea. |
| MCDOT Type A Precast Concrete Drainage Unit (24"x 24"x 24" ID) | Ea. |
| MCDOT Type A Precast Concrete Drainage Unit (24"x 24"x 30" ID) | Ea. |
| MCDOT Type A Precast Concrete Drainage Unit (24"x 24"x 36" ID) | Ea. |
| MCDOT Type S Precast Concrete Drainage Unit (24" x 32" x 24" ID) | Ea. |
| MCDOT Type S Precast Concrete Drainage Unit (24" x 32" x 30" ID) | Ea. |
| MCDOT Type S Precast Concrete Drainage Unit (24" x 32" x 36" ID) | Ea. |

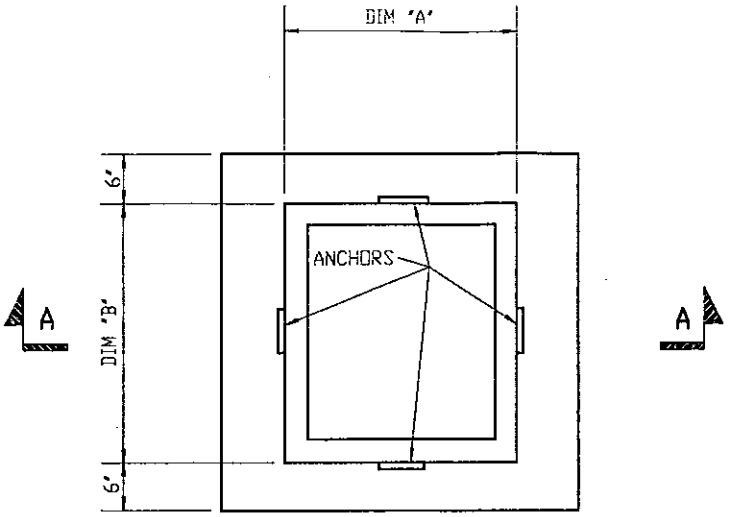


PLAN

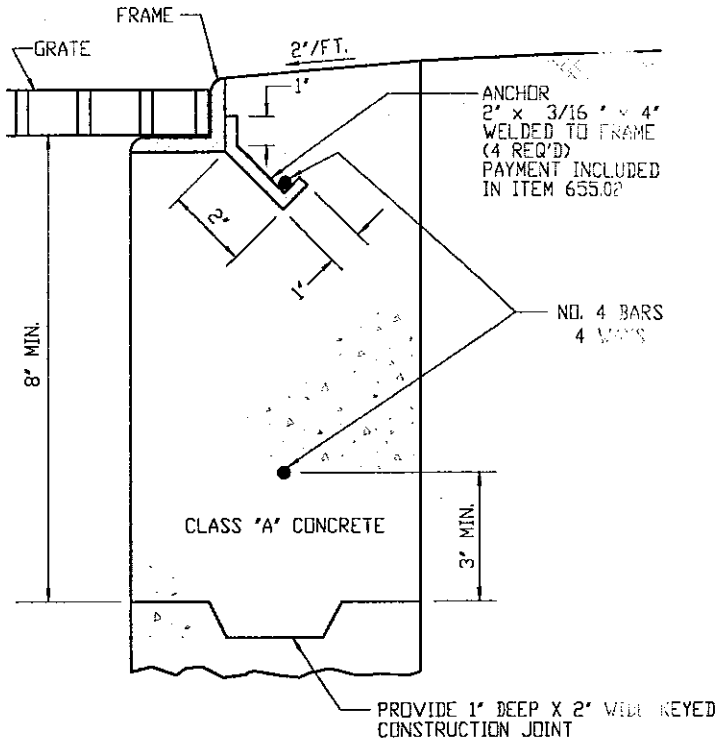


KEYWAY DETAIL

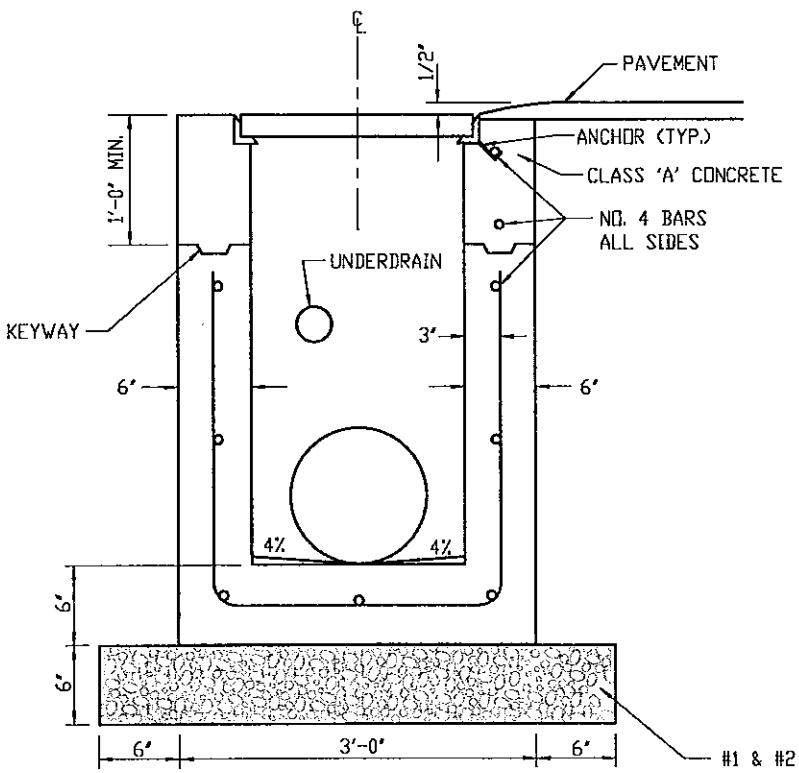


#1 & #2 CRUSHED STONE BEDDING
COST TO BE INCLUDED IN BID PRICE
FOR THE DRAINAGE STRUCTURE.

SECTION A-A

| TYPE | DIM 'A' | DIM 'B' |
|---|---|---|
| MCDOT A | 24' | 24' |
| NYSDOT S | 24' | 32' |

NOTES:

1. REINFORCEMENT SHALL HAVE A COVER OF 2" UNLESS OTHERWISE SHOWN. THE COST OF ALL BAR REINFORCEMENT SHALL BE INCLUDED IN THE PRICE BID FOR DROP INLETS. ALL BAR REINFORCEMENT IN THE PRE-CAST STRUCTURE SHALL BE ACCORDING TO NYSDOT STANDARD SHEET 604-5.
2. EXTERIORS OF ALL DROP INLETS TO BE COATED WITH TWO COATS OF HIGH BUILD COAL TAR PAINT. AFTER INSTALLATION IS COMPLETE AND THE BENCH IS INSTALLED, THE INTERIOR OF ALL DROP INLETS SHALL BE COATED WITH TWO COATS OF EPOXY RESIN DAMP PROOFING.
3. STEPS WILL NOT BE ALLOWED.

# DROP INLETS FOR MATERIAL BID

NOT TO SCALE

2/8/12

REVISED

**ITEM PRECAST CONCRETE RISERS FOR TYPE A & S DROP INLETS**:

**DESCRIPTION:**

Provide Precast Concrete Risers for MCDOT Type A (24"Sq.) & NYSDOT Type S Drop Inlets.

**MATERIAL REQUIREMENT:**

The material requirements shall be as specified in Section 706-04 of the New York State Specifications as shown on the NYSDOT standard sheets 604 Series and in the attached MCDOT detail. All concrete used shall meet a standard of 4000 psi compressive strength after 28 days, with air entrainment. Number 4 rebars shall be utilized having an outside cover of 3 inches. **The risers shall be fully coated (interior and exterior) with two coats of Koppers super service black bituminous coating or equal.**

**Dimensions**

The dimension of the precast concrete risers for MCDOT **type A** drop inlet shall be as follows:

a. Inside dimension = 24" X 24".
b. Outside dimension = 36" X 36".
c. Risers to be supplied shall be 6", 8", 12", and 18" heights.

The dimension of the precast concrete risers for NYSDOT **type S** drop inlet shall be as follows:

a. Inside dimension = 24" X 32".
b. Outside dimension = 36" X 44".
c. Risers to be supplied shall be 6", 8", and 12" heights.

**BASIS OF BID:**

The unit price bid shall be for each, including all cost of furnishing and delivering the unit F.O.B. to any point in Monroe County within 14 days of receipt of order.

**BASIS OF PAYMENT:**

| Description | Pay Unit |
|---|---|
| Precast Concrete Drainage Unit Riser 6" for MCDOT Type A Drainage Inlet | Ea. |
| Precast Concrete Drainage Unit Riser 8" for MCDOT Type A Drainage Inlet | Ea. |
| Precast Concrete Drainage Unit Riser 12" for MCDOT Type A Drainage Inlet | Ea. |
| Precast Concrete Drainage Unit Riser 18" for MCDOT Type A Drainage Inlet | Ea. |
| Precast Concrete Drainage Unit Riser 6" for MCDOT Type S Drainage Inlet | Ea. |
| Precast Concrete Drainage Unit Riser 8" for MCDOT Type S Drainage Inlet | Ea. |
| Precast Concrete Drainage Unit Riser 12" for MCDOT Type S Drainage Inlet | Ea. |

# PRE-CAST CONCRETE COVER FOR DROP INLET

## GENERAL NOTE

The intent of this specification is to provide pricing for concrete catch basin covers. Monroe County currently has approximately 300 such covers on various roads that are in need of immediate replacement. The intent of this bid is to allow for the purchase of several different sizes in various sized orders over the next couple of years to allow replacement of these covers on various County roads, and also to purchase a stock of these for replacement at various locations as the need arises in the future.

## SCOPE

This specification covers general material and quality requirements for reinforced pre-cast concrete catch basin covers (capstone). The AGENCY *will* consider alternatives proposed by the bidder for approval. 'Specification Sections' noted herein refer to the latest New York State Department of Transportation (NYSDOT) Standard Specifications.

## MATERIAL REQUIREMENTS

**Concrete:**
A homogenous, portland cement concrete mixture shall be used to construct pre-cast units. The class of concrete shall be Class "D", or approved equivalent, suitable for thin structural applications and conforming to Specifications Section 555, Concrete for Structures. DCI Corrosion Inhibitor shall be included in the design mix at a rate of 4 gallons per cubic yard, when proposed reinforcement consists of materials prone to corrosion.

The finished units shall be pre-cast per the dimensions shown on the attached details. An approved penetrating sealer shall be applied to all exposed surfaces of the finished units.

**Reinforcement:**
Epoxy-coated #2 bars conforming to material specification 709-01, or approved equal, are hereby specified. The attached details indicate placement and spacing of re-bars.

The vendor may submit for approval alternate reinforcement methods which meet the design strength requirements for loading, such as epoxy-coated wire mesh or a fiber mesh material.

**Minimum Loading:**
The units shall be designed to withstand the equivalent of an (H-20) high loading.

**Coating:**
The capstones are to be coated with Sonneborn waterproofing system Sonoshield HLM 5000® or approved equal.

## CONSTRUCTION DETAILS

Refer to the attached details for required exterior dimensions.

## BASIS OF BID

The unit bid price for each size and type of concrete cover listed shall include all costs for fabrication and delivery to one (1) drop site per order, to be determined, within Monroe County. Delivery shall include the cost of unloading the complete order of finished units at the drop site.

The unit bid price for each size and type of concrete cover listed, as well as a special variable size for capstones that are not standard, shall be based on the respective quantity specified. The specific sizes needed would be ordered by MCDOT.

All covers to be delivered within 60 days of the order, with deliveries scheduled to arrive at point of destination between the hours of 8:00 A.M. and 3:00 P.M., Monday through Friday, excluding holidays. Deliveries shall be scheduled a minimum of 48 hours in advance by contacting Mr. Alan Wegman, MCDOT, (or a contact from the respective AGENCY) at (585) 753-7845.

## BASIS of AWARD

The award of the bid will be based on the lowest sum total of the extended prices.

| DIMENSION | W | X | Y |
|---|---|---|---|
| SIZE A COVER | 3'-5" | 1'-11" | 1'-1 1/2" |
| SIZE B COVER | 3'-5" | 2'-4" | 1'-6 1/2" |
| SPECIAL COVER | TBD | TBD | TBD |

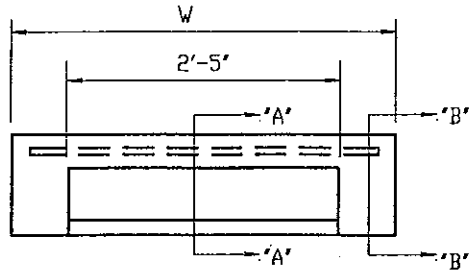


FRONT VIEW

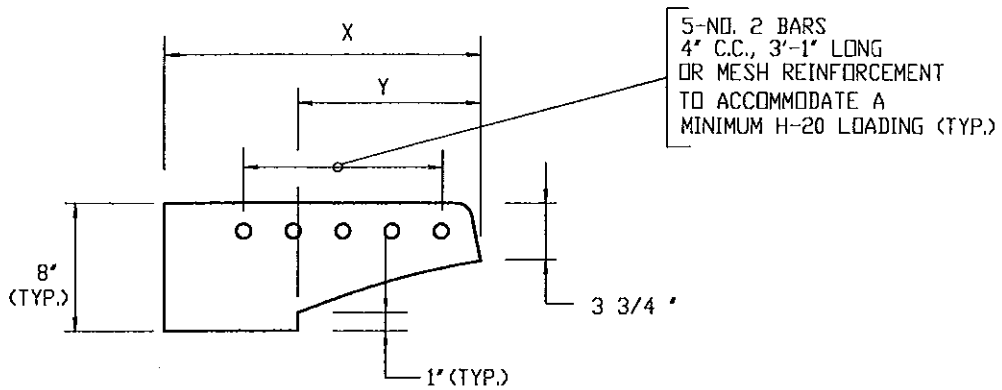


SECTION "A-A"

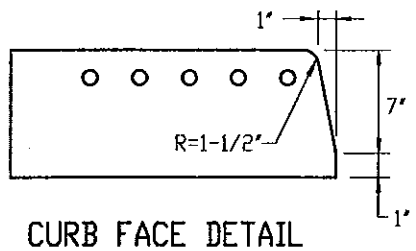


CURB FACE DETAIL

SECTION "B-B"

# PRECAST CONCRETE COVER FOR RECESSED DROP INLETS

NOT TO SCALE

1/18/08

REVISED

**BP#0313-12**
**PRECAST CONCRETE STRUCTURES, RISERS & COVERS**

**UNIT PRICE SHEET**

| DRAINAGE STRUCTURES | | |
|---|---|---|
| **MATERIAL** | **UOM** | **UNIT PRICE** |
| MCDOT Type A Precast Concrete Drainage Unit (24” x 24” x 21” ID) | Each | $_____ |
| MCDOT Type A Precast Concrete Drainage Unit (24” x 24” x 24” ID) | Each | $_____ |
| MCDOT Type A Precast Concrete Drainage Unit (24” x 24” x 30” ID) | Each | $_____ |
| MCDOT Type A Precast Concrete Drainage Unit (24” x 24” x 36” ID) | Each | $_____ |
| MCDOT Type S Precast Concrete Drainage Unit (24” x 32” x 24” ID) | Each | $_____ |
| MCDOT Type S Precast Concrete Drainage Unit (24” x 32” x 30” ID) | Each | $_____ |
| MCDOT Type S Precast Concrete Drainage Unit (24” x 32” x 36” ID) | Each | $_____ |
| Precast Concrete Drainage Unit Riser 6” for MCDOT Type A Drainage Inlet | Each | $_____ |
| Precast Concrete Drainage Unit Riser 8” for MCDOT Type A Drainage Inlet | Each | $_____ |
| Precast Concrete Drainage Unit Riser 12” for MCDOT Type A Drainage Inlet | Each | $_____ |
| Precast Concrete Drainage Unit Riser 18” for MCDOT Type A Drainage Inlet | Each | $_____ |
| Precast Concrete Drainage Unit Riser 6” for MCDOT Type S Drainage Inlet | Each | $_____ |
| Precast Concrete Drainage Unit Riser 8” for MCDOT Type S Drainage Inlet | Each | $_____ |
| Precast Concrete Drainage Unit Riser 12” for MCDOT Type S Drainage Inlet | Each | $_____ |

| PRE-CAST CONCRETE COVER FOR DROP INLET | | | |
|---|---|---|---|
| **DESCRIPTION** | **EST. QTY.** | **UNIT PRICE** | **EXTENSION** |
| SIZE “A”, TYPE “C” – (41x23), Concrete Curb Face Type | 240 Each | $_____ | $_____ |
| SIZE “B”, TYPE “C” – (41x28), Concrete Curb Face Type | 90 Each | $_____ | $_____ |
| Special Variable Size Cap | 250 SF | $_____ | $_____ |
| | | **TOTAL BID** | $_____ |

**TRANSFER TOTAL BID AMOUNT TO PROPOSAL PAGE.**

Retain For Your Records
DO NOT RETURN WITH YOUR BID

# General Specifications County Of Monroe

DEPARTMENT OF FINANCE
Division of Purchasing and Central Services

Dawn C. Staub
Purchasing Manager

Monroe County Office Building
39 West Main Street, Room 200
Rochester, New York 14614
(585) 753-1100

## FOREWORD

This booklet contains the General Specifications of the County of Monroe Division of Purchasing and Central Services and supersedes any previous issue. The terms and conditions set forth apply to all contracts awarded by the County of Monroe Division of Purchasing and Central Services.

## DEFINITIONS

**POLITICAL SUBDIVISIONS:** All County departments, institutions, agencies, political subdivisions (town, city, village public school districts) and others authorized by law to make purchases through the County Purchasing Division.

**BID:** An offer to furnish a described commodity at a stated price in accordance with the proposal and specification.

**BIDDER:** Any person, firm or corporation submitting a proposal to the County.

**COMMODITIES:** Materials, supplies, equipment and non-professional services.

**CONTRACTOR:** Any bidder to whom a contract award is made by the Purchasing Manager or Legislature.

**CONTROLLER:** Controller of the County of Monroe.

**COUNTY:** County of Monroe.

**GROUP:** A classification of commodities.

**LATE BID:** A bid received in the office of the Purchasing Division, whether in person or by mail, after the time and date established in the bid specifications for the bid opening.

**PURCHASING MANAGER:** Manager of the Purchasing Division for the County of Monroe.

**NOTICE OF CONTRACT AWARD:** The notification to all participants that a contract has been made between the County and the successful bidder.

**PROPOSAL:** The form which, when issued by the Purchasing Division, constitutes an invitation to bid on the commodity described therein and which, when completed by the bidder, constitutes his/her bid to the County to furnish such commodity.

**PURCHASE ORDER:** The official form to be used by Monroe County when placing an order for material, equipment or supplies with a contractor or vendor.

**SPECIFICATION:** Description of a commodity and the conditions for its purchase.

## PROPOSALS AND BIDS

1. The date and time of bid opening will be given on the proposal.

2. All bids are to be submitted on forms provided by the Purchasing Division.

3. All bids must be submitted in a sealed envelope clearly marked with bid number, title, opening date and time. Bids must not be attached to or enclosed in packages containing bid samples.

4. All information required by the proposal and specifications must be supplied by the bidder.

5. Each bid offered shall be construed in accordance with the specifications and proposal. The bidder must explain all deviations, exceptions and qualifications in detail in the bid.

6. Prices and information required by the proposal, except the signature of bidder, shall be typewritten or printed in ink for legibility. Bids written in pencil may be rejected. The Purchasing Manager may interpret or reject illegible or vague bids and the decision shall be final. All signatures must be in ink. Facsimile, printed or typewritten signatures are not acceptable and the bid may be rejected.

7. No alteration, erasure or addition of the specifications or the proposal shall be made.

8. In all specifications or proposals, the words "or equal" are understood to appear after each commodity giving manufacturer's name or catalog reference or on any patented commodity. If bidding on commodities other than those specified, bidder must in every instance give the trade designation of the commodity, manufacturer's name and detailed specification of commodity he/she proposes to furnish. Otherwise, bid will be construed as submitted on the identical commodity described in the specifications.

9. Used, damaged or obsolete items are not acceptable unless specifically requested and if offered or delivered, shall be rejected and the contract may be cancelled.

10. When bids are requested on a number of commodities as a group, a bidder desiring to bid "no charge" on a commodity in the grouping must so indicate. Otherwise, such bid will be considered as incomplete and may be rejected. Any bidder failing to bid on minimum number of items specified in the bid package may have his/her bid declared incomplete or unresponsive and the Purchasing Manager has the discretion to reject the bid.

11. The bidder must insert the price per unit specified and the price extension for each item in the bid if required. In the event of a discrepancy between the unit price and the extension, the unit price will govern. Prices must be extended in decimals, not fractions.

12. Prices must be net, including transportation and delivery charges fully prepaid by contractor to the destination(s) indicated in the proposal, subject only to the cash discount. If the award is to be on any other basis, transportation charges must be prepaid by the contractor and added to the invoice as a separate item.

13. Bidders are cautioned to verify their bids before submission, as bids and amendments to bids or requests for withdrawal of bids received by the Purchasing Manager after the time specified for the bid opening may not be considered.

14. All bids will be opened and tabulated publicly at the time and place set forth in the proposal.

15. A late bid will be rejected and cannot be considered in awarding a contract.

## SAMPLES

16. The Purchasing Manager reserves the right to request a representative sample of the commodity at any time. The sample shall be furnished within the timeframe specified in the bid package.

17. If in the judgment of the Purchasing Manager, the sample is not in accordance with the requirements stated in the specifications and the proposal, the County may reject the bid; or if an award has been made, cancel the contract at the expense of the contractor.

18. When samples are required, failure to submit them in accordance with instructions may be sufficient cause for rejecting a bid or canceling an award.

19. When an accepted sample exceeds the minimum specifications, all commodities delivered will be of same quality and identity as the sample.

20. Samples must be submitted free of charge and be accompanied by the bidder's name and address, a statement indicating how and where the sample is to be returned to the bidder and descriptive literature regarding the commodity. Samples will be returned at the bidder's expense and risk.

21. All samples are subject to tests in the manner and place designated by the Purchasing Manager. Samples consumed or made useless by testing cannot be returned to the bidder and the County will not be responsible for any costs as a result of such testing.

22. Where the sample has not been impaired by testing and the bidder has failed to indicate the place and mode of return of the sample, it becomes the property of the County at the conclusion of the contract period.

23. Samples may be held by the County during the entire term of the contract for comparison with deliveries.

24. A Proposal may indicate that the commodity to be purchased must be equal to a sample on display in a designated place. Failure on the part of the bidder to examine such sample shall NOT entitle him to any relief from the conditions imposed in the proposal, specification and related documents. If feasible, standard samples will be submitted to the bidder for his/her examination prior to the bid opening date.

25. Cash discounts will no be considered as a basis for award in any contract.

**AWARDS**

26. The Purchasing Manager reserves the right before making an award, to investigate whether or not the items, qualifications or facilities offered by the bidder meet the requirements set forth in the proposal and specifications and is ample and sufficient to insure the proper performance of the contract, in the event of award. The bidder must be prepared, if requested by the Purchasing Manager, to present evidence of experience, ability and financial standing, as well as a statement as to plant, machinery and capacity of the manufacturer for the production and distribution of the commodity on which he/she is bidding. If in the opinion of the Purchasing Manager, it is found that the conditions of the proposal and specifications are not complied with or that items proposed to be furnished do not meet the requirements or specifications called for or that the qualifications, financial standing, facilities or capacities are not satisfactory, the Purchasing Manager may reject such a bid. The Purchasing Manager, in no way, is required or obligated to conduct such investigation prior to awarding the contract. It is further understood that if such investigations are made, it in no way relieves the contractor from fulfilling all requirements and conditions of the contract.

27. Contracts shall be awarded to the lowest responsive and responsible bidder. Responsibility is determined by taking into consideration the reliability of the bidder, the qualities of the articles proposed to be supplied and their conformity with the specifications, the purposes for which required and the terms of delivery and any historical performance record of the bidder that may be maintained by the County.

28. A bidder may be disqualified from receiving awards if such bidder or anyone in his/her employ, has previously failed to perform satisfactorily in connection with public bidding or contracts.

29. The Purchasing Manager reserves the right to evaluate and/or reject all bids in whole or in part and to waive technicalities, irregularities and omissions, if in her judgment; the best interests of the County will be served.

30. The Purchasing Manager reserves the right to make awards within forty-five (45) days after the date of the bid opening, during which period bids shall not be withdrawn.

31. If two or more bidders submit identical bids as to price, the decision of the Purchasing Manager to award a contract to one or more of such identical bidders shall be final.

**CONTRACTS**

32. All contracts awarded by the Purchasing Manager shall be executory only to the extent that funds are available to each Agency or Department for the purchase of the commodity.

33. All bids shall be received with the understanding that the acceptance thereof, in writing, by the Purchasing Manager or governing body, shall constitute a contract between the bidder and the County. The mailing of either a notice of contract award identified by number or of a purchase order to the address on the bid shall be sufficient notice of such acceptance.

34. Unless otherwise specified, the quantities listed in the proposal are subject to change to conform to Agency or Department requirements.

35. The County reserves the right to order up to 10% more or 10% less than the quantities called for in the contract. This paragraph shall not apply to estimated quantity contracts. Over runs and under runs shall not exceed 10%.

36. Unless terminated or cancelled by the Purchasing Manager pursuant to the authority vested in her, contracts will remain in force for the period specified.

37. All purchase orders must be in writing and must bear the appropriate contract number and the approval of the Purchasing Manager.

38. No commodities are to be shipped or delivered until after receipt of an official purchase order from the County, unless otherwise authorized in writing by the Purchasing Manager.

39. The contractor shall not assign, transfer, convey, sublet or otherwise dispose of the contract or his/her right, title or interest therein or his/her power to execute such contract to any other person, company or corporation without the prior consent, in writing, of the Purchasing Manager. (Approval by the Purchasing Manager is not required for the assignment of monies due for contract deliveries. Such assignments should be filed directly with the Purchasing Manager.)

40. No alteration or variation of the terms of the contract shall be valid or binding upon the County unless requested in writing and approved in writing by the Purchasing Manager.

41. Contractor shall employ no one in relation to the work contemplated by the contract who shall be permitted or required to work more than eight (8) hours in any one calendar day or more than five (5) days in any one week except in cases of extraordinary emergency caused by war, acts of public enemies, strikes, fire, flood or danger to life or property and the wages to be paid to employees for a legal day's work shall not be less than the prevailing New York State wage rates for a day's work in the same trade or occupation in the locality where the contract work is executed.

42. Pursuant to the provision of Section 220-A of the New York State Labor Law, as amended, the Contractor (and his/her Sub-Contractors) will be obligated to pay all workers in the covered classes the applicable prevailing wage rates and supplements. The minimum hourly wage rate to be paid the various classes of labor performing work under this contract shall be in accordance with schedules which have been established or may hereafter be established or increased, by the New York State Department of Labor during the contract term.

**DELIVERY**

43. Delivery must be made as ordered and in accordance with the terms of the contract. Unless otherwise specified, delivery shall be made within thirty (30) days of receipt of purchase orders by the contractor. The decision of the Purchasing Manager as to reasonable compliance with delivery terms shall be final. Burden of proof of delay in receipt of purchase order shall rest with contractor.

44. Any extension of time of delivery must be requested in writing by the contractor and approved in writing by the Purchasing Manager.

45. The Departments will not schedule any deliveries for Saturdays, Sundays or legal holidays, except commodities required for daily consumption or where the delivery is an emergency, a replacement or is overdue, in which events the convenience of the County will govern.

46. Commodities shall be securely and properly packed for shipment, storage and stocking in new shipping containers and according to accepted commercial practice, without extra charge for packing cases, baling or sacks. The container shall remain the property of the County unless otherwise specifically agreed to in the contract.

47. Point of Destination: All deliveries shall be unloaded at the storeroom door of the ordering Agency or department unless otherwise stated in the proposal or specification.

48. Commodities purchased at a price, f.o.b. shipping point plus transportation charge, are understood to be purchased on an f.o.b. point of destination basis. Title shall not pass until commodities have been received and accepted by the Agency or Department.

49. When commodities are rejected with notice of such rejection having been provided to the bidder, they must be removed by the contractor from the premises of the Department or Agency within five (5) days from notification. Rejected items left longer than five (5) days will be regarded as abandoned and the County shall have the right to dispose of them as its own property.

**DEPOSITS**

50. Unless otherwise expressly indicated, specification deposits are returned only to those prospective contractors who actually submit proposals to the County of Monroe and have returned their specifications unmarked and in good condition within 30 days of the bid award.

51. Unless otherwise expressly indicated, bid deposits are considered an earnest of good faith and are retained by the County only until a contract has been awarded; at which time they are returned to all bidders who submitted proposals. Failure, on the part of a contractor, to execute a contract, may result in forfeiture of his/her bid deposit.

**PAYMENTS**

52. Payments will be made by the Controller after presentation of a completed voucher to the ordering Department or Agency.

53. In any case where a question of non-performance of a contract arises, payment may be withheld in whole or in part at the discretion of the Purchasing Manager. Should the amount withheld be finally paid, a cash discount originally offered may be taken by the County as if no delay in payment had occurred.

54. Any claim against a contractor may be deducted by the County from any money due him in the same or other transactions. If no deduction is made in such fashion the contractor shall pay the County the amount of such claim on demand. Submission of a voucher and payment thereof by the County shall not preclude the Purchasing Manager from demanding a price adjustment in any case where the commodity delivered is later found to deviate from the specification and proposal. Any delivery made which does not meet the requirements of the specifications and proposal may be rejected or accepted on an adjusted price basis as determined by the Purchasing Manager.

55. Tax Provisions: Purchases made by the County of Monroe are not subject to State or Local sales taxes or Federal Excise taxes. To satisfy the requirements of the New York State Sales Tax, either the purchase order issued by an agency or institution of New York State for supplies or equipment or the voucher forwarded to authorize payment for such supplies and equipment will be sufficient evidence that the sale by a contractor or vendor was made to the County of Monroe, an exempt organization under section 1116 (a) (I) of the Tax Law. Exemption certificates for Federal Excise taxes will be furnished upon request by the Purchasing Division. No person, firm or corporation is, however, exempt from paying the New York State Truck Mileage and Unemployment Insurance or the Federal Social Security Taxes. This exemption does not apply to materials not incorporated into the work of a Public Works Contract.

**GUARANTEES BY CONTRACTOR**

56. Contractor hereby guarantees:

    (a) To save the County, its agents and employees, harmless from any liability imposed upon the County arising from the negligence, either active or passive, of the contractor, as well as for the use of any copyrighted or uncopyrighted composition, secret process, patented or unpatented invention, article or appliance furnished or used in the performance of the contract of which the contractor is not the patentee, assignee or licensee.

    (b) To pay for all permits, New York licenses and fees and gives all notices and complies with all laws, ordinances, rules and regulations.

    (c) That the equipment offered is standard new equipment, latest model of regular stock product with all parts regularly used with the type of equipment offered; also, that no attachment or part has been substituted or applied contrary to manufacturer's recommendations and standard practice. Every unit delivered must be guaranteed against faulty material and workmanship for a period of one year unless otherwise specified.

57. Waiver of Immunity Clause:

103-a. Ground for cancellation of contract by municipal corporations and fire districts.

A clause shall be inserted in all specifications or contracts made or awarded by a municipal corporation or any public department, agency or official thereof on or after the first day of July, nineteen hundred fifty-nine or by a fire district or any agency or official thereof on or after the first day of September, nineteen hundred sixty, for work or services performed or to be performed or goods sold or to be sold, to provide that upon the refusal of a person, when called before a grand jury, head of a state department, temporary state commission or other state agency, the organized crime task force in the department of law, head of a city department or other city agency, which is empowered to compel the attendance of witnesses and examine them under oath, to testify in an investigation concerning any transaction or contract had with the state, any political subdivision thereof, a public authority or with any public department, agency or official of the state or of any political subdivision thereof or of a public authority, to sign a waiver of immunity against subsequent criminal prosecution or to answer any relevant question concerning such transaction or contract.

(a) such person and any firm, partnership or corporation of which he is a member, partner, Purchasing Manager or officer shall be disqualified from thereafter selling to or submitting bids to or receiving awards from or entering into any contracts with municipal corporation or fire district or any public department, agency or official thereof, for goods, work or services, for a period of five years after such refusal and to provide also that

(b) any and all contracts made with any municipal corporation or any public department, agency or official thereof on or after the first day of July, nineteen hundred fifty-nine or with any fire district or any agency or official thereof on or after the first day of September, nineteen hundred sixty, by such person and by any firm, partnership or corporation of which he is a member, partner, Purchasing Manager or officer may be cancelled or terminated by the municipal corporation or fire district without incurring any penalty or damages on account of such cancellation or termination but any monies owing by the municipal corporation or fire district for goods delivered or work done prior to the cancellation or termination shall be paid.

The provisions of this section as in force and effect prior to the first day of September, nineteen hundred sixty, shall apply to specifications or contracts made or awarded by a municipal corporation on or after the first day of July, nineteen hundred fifty-nine but prior to the first day of September, nineteen hundred sixty.

103-b. Disqualification to contract with municipal corporations and fire districts.

Any person who, when called before a grand jury, head of a state department, temporary state commission or other state agency, the organized crime task force in the department of law, head of a city department or other city agency, which is empowered to compel the attendance of witnesses and examine them under oath, to testify in an investigation concerning any transaction or contract had with the state, any political subdivision thereof, a public authority or with a public department, agency or official of the state or of any political subdivision thereof or of a public authority, refuses to sign a waiver of immunity against subsequent criminal prosecution or to answer any relevant question concerning such transaction or contract and any firm, partnership or corporation of which he is a member, partner, Purchasing Manager or officer shall be disqualified from thereafter selling to or submitting bids to or receiving awards from or entering into any contracts with any municipal corporation or fire district or with any public department, agency or official thereof, for goods, work or services, for a period of five years after such refusal or until a disqualification shall be removed pursuant to the provisions of section one hundred three-c of this article.

It shall be the duty of the officer conducting the investigation before the grand jury, the head of a state department, the chairman of the temporary state commission or other state agency, the organized crime task force in the department of law, the head of a city department or other city agency before which the person so refusing is known to be a member, partner, officer or Purchasing Manager, to the commissioner of transportation of the state of New York and the appropriate departments, agencies and officials of the state, political subdivisions thereof or public authorities with whom the person so refusing and any firm, partnership or corporation of which he is a member, partner, Purchasing Manager or officer, is known to have a contract. However, when such refusal occurs before a body other than a grand jury, notice of refusal shall not be sent for a period of ten days after such refusal occurs. Prior to the expiration of this ten day period, any person, firm, partnership or corporation which has become liable to the cancellation or termination of a contract or disqualification to contract on account of such refusal may commence a special proceeding at a special term of the supreme court, held within the judicial district in which the refusal occurred, for an order determining whether the

questions in response to which the refusal occurred were relevant and material to the inquiry. Upon the commencement of such proceeding, the sending of such notice of refusal to answer shall be subject to order of the court in which the proceeding was brought in a manner and on such terms as the court may deem just. If a proceeding is not brought within ten days, notice of refusal shall thereupon be sent as provided herein.

103-d. Statement of non-collusion in bids and proposals to political subdivision of the state.

(FN1) Every bid or proposal hereafter made to a political subdivision of the state or any public department, agency or official thereof where competitive bidding is required by statute, rule, regulation or local law, for work or services performed or to be performed or goods sold or to be sold, shall contain the following statement subscribed by the bidder and affirmed by such bidder as true under the penalties of perjury: Non-collusive bidding certification.

(a) "By submission of this bid, each bidder and each person signing on behalf of any bidder certifies and in the case of a joint bid each party thereto certifies as to its own organization, under penalty of perjury, that to the best of knowledge and belief:

(1) The prices in this bid have been arrived at independently without collusion, consultation, communication or agreement, for the purpose of restricting competition, as to any matter relating to such prices with any other bidder or with any competitor;

(2) Unless otherwise required by law, the prices which have been quoted in his/her bid have not been knowingly disclosed by the bidder and will not knowingly be disclosed by the bidder prior to opening, directly or indirectly to any other bidder or to any competitor and;

(3) No attempt has been made or will be made by the bidder to induce any other person, partnership or corporation to submit or not to submit a bid for the purpose of restricting competition.

(b) A bid shall not be considered for award nor shall any award be made where (a) (1) (2) and (3) above have not been complied with; provided however, that if in any case the bidder cannot make the foregoing certification, the bidder shall so state and shall furnish with the bid a signed statement which sets forth in detail the reasons therefore. Where (a) (1) (2) and (3) above have not been complied with, the bid shall not be considered for award nor shall any award be made unless the head of the purchasing unit of the political subdivision, public department, agency or official thereof to which the bid is made or his/her designee, determines that such disclosure was not made for the purpose of restricting competition.

The fact that a bidder (a) has published price lists, rates or tariffs covering items being procured, (b) has informed prospective customers of proposed or pending publication of new or revised price lists for such items or;

(c) Has sold the same items to other customers at the same prices being bid, does not constitute, without more, a disclosure within the meaning of subparagraph one (a).

Any bid hereafter made to any political subdivision of the state or any public department, agency or official thereof by a corporate bidder for work or services performed or to be performed or goods sold or to be sold, where competitive bidding is required by statute, rule, regulation or local law and where such bid contains the certification referred to in subdivision one of this section, shall be deemed to have been authorized by the board of Purchasing Managers of the bidder and such authorization shall be deemed to include the signing and submission of the bid and the inclusion therein of the certificate as to non-collusion as the act and deed of the corporation.

58. Anti-discrimination Clause: During the performance of this contract, the contractor agrees as follows:

(a) The contractor will not discriminate against any employee because of race, creed, color, sex or national origin and will take affirmative action to insure that they are afforded equal employment opportunities without discrimination because of race, creed, color, sex or national origin. Such action shall be taken with reference but not be limited to: recruitment, employment, job assignment, promotion, upgrading, demotion, transfer, layoff or termination, rates of pay or other forms of compensation and selection for training or retraining, including apprenticeship and on-the job training.

(b) The contractor will send to each labor union or representative of workers with which he has or is bound by a collective bargaining or other agreement or understanding, a notice, to be provided by the New

York State Division for Human Rights, advising such labor union or representative of the contractor's agreement under clauses (a) through (g) hereinafter called "non-discrimination clauses"). If the contractor was directed to do so by the contracting agency as part of the bid or negotiation of this contract, the contractor shall request such labor union or representative to furnish him with a written statement that such labor union or representative will not discriminate because of race, creed, color, sex or national origin and that such labor union or representative either will affirmatively cooperate, within the limits of its legal and contractual authority, in the implementation of the policy and provisions of these non-discrimination clauses or that it consents and agrees that recruitment, employment and the terms and conditions of employment under this contract shall be in accordance with the purposes and provisions of these non-discrimination clauses. If such labor union or representative fails or refuses to comply with such a request that it furnish such a statement, the contractor shall promptly notify the New York State Division of Human Rights of such failure or refusal.

(c) The contractor will post and keep posted in conspicuous places, available to employees and applicants for employment, notices to be provided by the New York State Division of Human Rights setting forth the substance of the provisions of clauses (a) and (b) and such provisions of the State's laws against discrimination as the New York State Division of Human Rights shall determine.

(d) The contractor will state, in all solicitations or advertisements for employees placed by or on behalf of the contractor, that all qualified applicants will be afforded equal employment opportunities without discrimination because of race, creed, color, sex or national origin.

(e) The contractor will comply with the provisions of the Human Rights Law of the State of New York as set forth in section 290-301 of the Executive Law of New York, will furnish all information and reports deemed necessary by the State Division for Human Rights under these non-discrimination clauses and such sections of the Executive Law and will permit access to his/her books, records and accounts by the State Division for Human Rights, the Attorney General and the Industrial Commissioner for purposes of investigation to ascertain compliance with these non-discrimination clauses and such sections of the Executive Law and applicable Federal Civil Rights Laws.

(f) This contract may be forthwith cancelled, terminated or suspended, in whole or in part by the contracting agency upon the basis of a finding made by the New York State Division for Human Rights that the contractor has not complied with these non-discrimination clauses and the contractor may be declared ineligible for future contracts made by or on behalf of the State or a public authority or agency of the State, until he/she satisfies the New York State Division for Human Rights that he/she has established and is carrying out a program in conformity with the provisions of these non-discrimination clauses. Such finding shall be made by the New York State Division for Human Rights after conciliation efforts by the Commission have failed to achieve compliance with these non-discrimination clauses and after a verified complaint has been filed with the Division, notice thereof has been given to the contractor and an opportunity has been afforded him/her to be heard publicly before three members of the Division. Such sanctions may be imposed and remedies invoked independently of or in addition to sanctions and remedies otherwise provided by law.

(g) The contractor will include the provisions of clauses (a) through (f) in every subcontract or purchase order in such a manner that such provisions will be binding upon each subcontractor or vendor as to operations to be performed within the State of New York. The contractor will take such action in enforcing such provisions of such subcontract or purchase order as the contracting agency may direct; including sanctions or remedies for non-compliance. If the contractor becomes involved in or is threatened with litigation with a subcontractor or vendor as a result of such direction by the contracting agency, the contractor shall promptly so notify the Attorney General, requesting him to intervene and protect the interests of the State of New York.

59. Workmen's Compensation: Contractor will secure workman's compensation and keep insured during the life of the contract for the benefit of such employees as are required to be insured by the provisions of Chapter 41 of the laws of 1914, as amended, known as the Workmen's Compensation Law and also provisions of Article 9 of the Workmen's Compensation Law known as the Disability Benefits Law. The contract shall be void and of no effect unless the contractor complies with these provisions.

## CANCELLATION OF CONTRACT

60. Upon failure of the contractor to deliver within the time specified or failure to make prompt replacement of rejected commodities when so requested, the Purchasing Manager may purchase from other sources to replace the commodity rejected or not delivered. On all such purchases, the contractor agrees to reimburse the County promptly for costs associated with purchasing from other sources. Should the cost be less than the contract price, the contractor shall have no claim to the difference. Such purchases may be deducted from contract quantity by the Purchasing Manager.

61. A contract may be cancelled at the contractor's expense upon nonperformance of contract.

## DRAWINGS

62. Rough and/or shop drawings shall be furnished as deemed necessary and required by the specification. Such drawings shall be consistent with the contract documents and shall be considered as forming part of the specification and the contract to which they relate.

63. All lettering on the drawings shall be considered a part of the drawings.

64. Approval by the Purchasing Manager of shop drawings of details for any commodity will not relieve the contractor from responsibility for furnishing same of proper dimension, size, quantity and quality to efficiently perform the work and carry out the requirements and intent of the layout or descriptive drawings forming part of the proposal and specifications. Such approval shall not relieve the contractor from responsibility for errors of any sort in the shop drawings. If the shop drawings deviate or are intended to deviate from the layout or descriptive drawings on specifications, the contractor shall so advise the Purchasing Manager in writing at the time the shop drawings are submitted, stating the difference in value between the contract requirements and that denoted by said shop drawings.

65. Rough and/or shop drawings will be examined by the Purchasing Manager and if necessary, will be returned to the contractor for correction. After the corrections have been made, the contractor shall resubmit to the Purchasing Manager as many copies as required for final approval.

66. All drawings and copies thereof shall become the property of the County.

## CONTRACTS INVOLVING INSTALLATION

67. Contractor shall clean up and remove all debris and rubbish resulting from his/her work from time to time as required or directed. Upon completion of the work the premises shall be left in a neat unobstructed condition, the buildings broom clean and everything in satisfactory repair and order.

68. Equipment, supplies and materials shall be stored at the site only upon the approval of the using Agency and at the contractor's risk. In general, such on-site storage should be avoided to prevent possible damage or loss of the material.

69. Work shall be performed so as to cause the least inconvenience to the County and with proper consideration for the rights of other contractors or workmen. The contractor shall keep in touch with the entire operation and install his/her equipment promptly.

70. Installation shall also include the furnishings of any rigging necessary to move equipment into the buildings; also the removal and resetting of any removable windows used for moving equipment into building.

71. Bidders shall acquaint themselves with conditions to be found at the site and shall assume all responsibility for placing and installing the equipment in the locations required.

72. All materials used in installation shall be of the highest quality and shall be free from all defects which would mar the appearance of the equipment or render it structurally unsound.

73. Contractor shall furnish adequate protection from damage for all work and shall repair damages of any kind for which he/she or his/her workmen are responsible.

## SAVINGS CLAUSE

74. The contractor shall not be responsible for any losses resulting from his/her failure to perform properly, if such failure was due to causes beyond his/her control and without his/her fault or negligence, including but not restricted to acts of God, wars, acts of public enemies, strikes, fires and floods, provided that the contractor shall within ten (10) days from the beginning of any such delay, notify the Purchasing Manager, in writing, of the cause of such delay.

75. The terms, conditions and requirements set forth in these General Specifications shall be binding upon bidders and contractors submitting bids or furnishing materials in connection with proposals received or contracts awarded by the County pursuant to rules and regulations promulgated by the Purchasing Manager of the Monroe County Division of Purchasing and Central Services.