REVISED

11/19/03

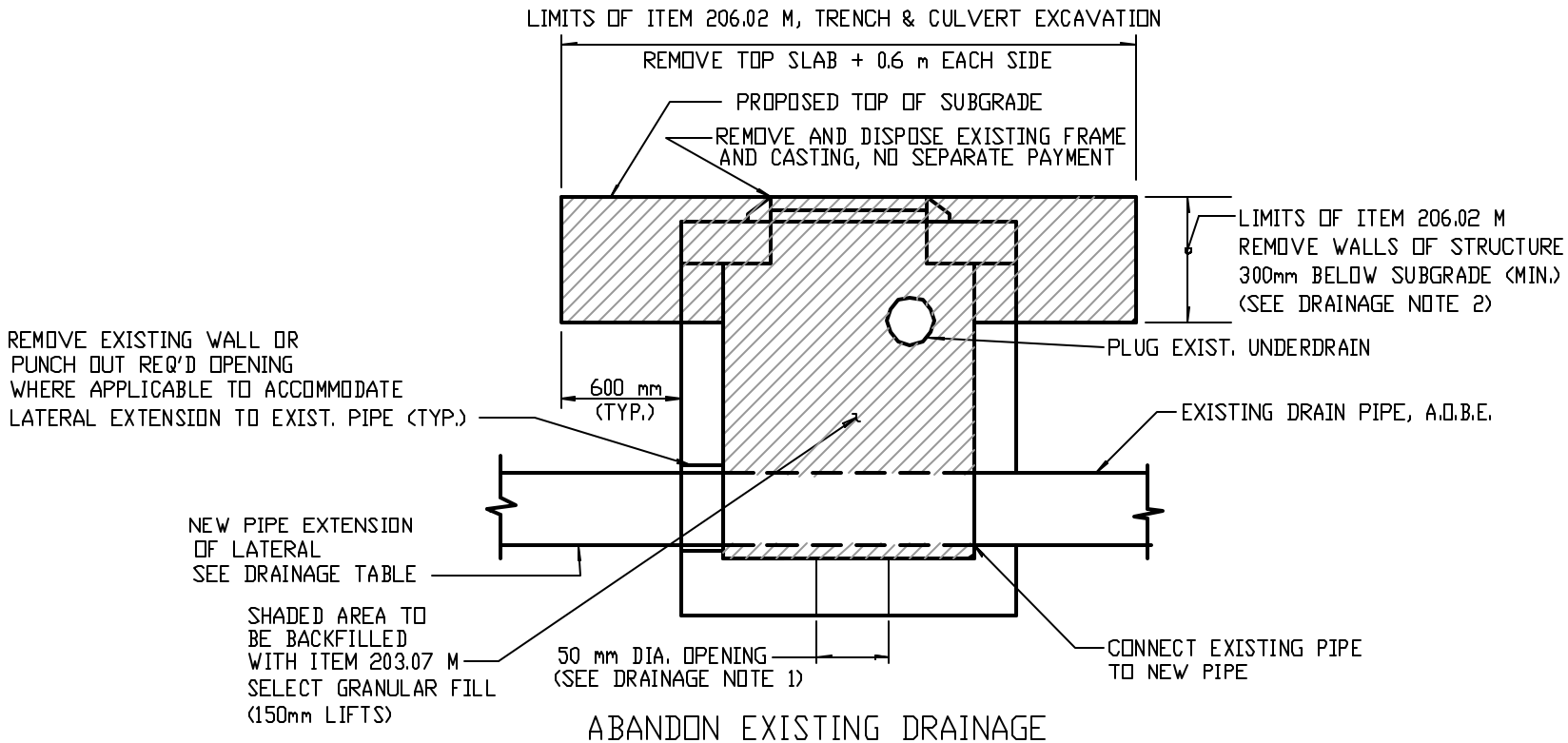

ABANDON EXISTING DRAINAGE STRUCTURE IN PLACE PIPE THRU

NOT TO SCALE