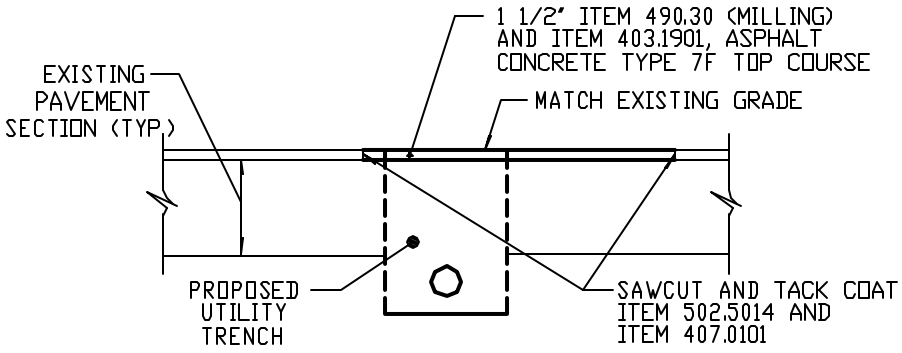

SECTION A-A

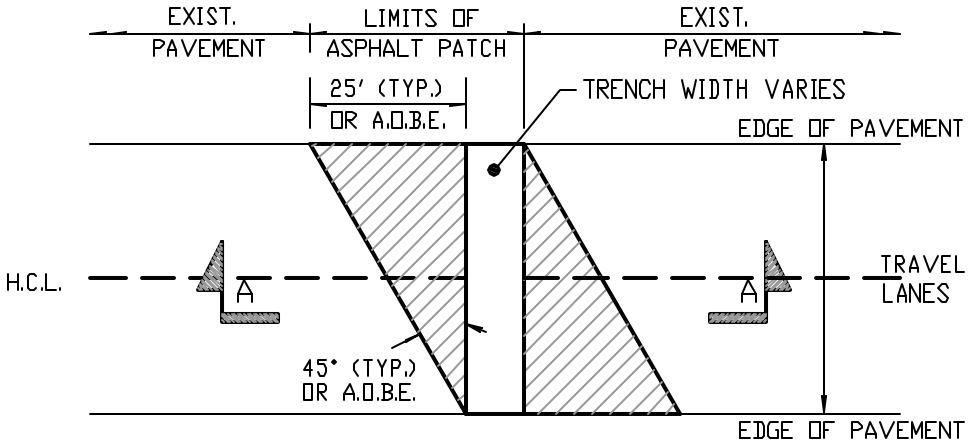

PLAN

NOTES:

1. THE CONTRACTOR SHALL HAVE BACKFILLED, COMPACTED, AND PROPERLY PAVED AND ROLLED UP TO FINAL GRADE WITHIN THE OPEN CUT AREA PRIOR TO MILLING OF THE FINAL PATCH.

2. IF BINDER COURSE IS LEFT EXPOSED OVER WINTER, IT SHALL BE KEYED INTO THE EXISTING PAVEMENT WITH AN 3" RECESS.

3. FOR GUIDANCE ON SUB SURFACE WORK, REFER TO M.C.D.O.T. DETAIL TITLED "FULL DEPTH TRENCH REPLACEMENT WITH ASPHALT OVERLAY".

4. JOINTS SHALL BE SAWCUT AND TACK COAT APPLIED PRIOR TO FINAL PAVING.

5. AFTER FINAL PAVING THE JOINTS SHALL BE SEALED WITH FIBER CRACKFILL.

ASPHALT PATCH OVER FULL DEPTH TRENCH REPLACEMENT

NOT TO SCALE

3/17/03

REVISED