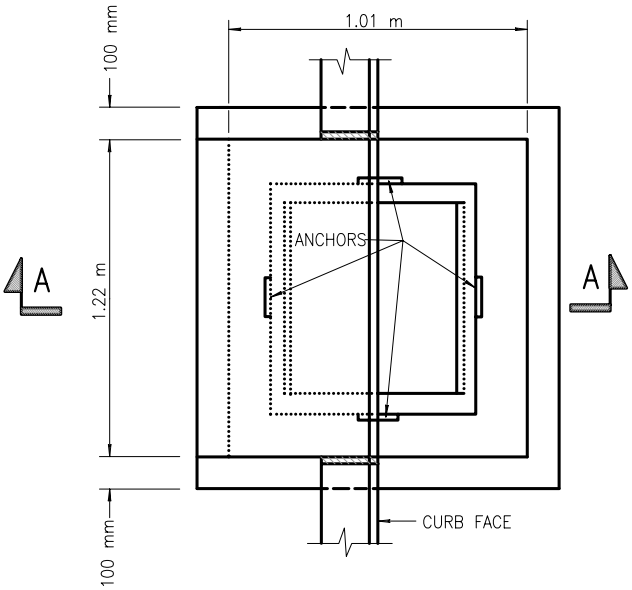

PLAN FOR 450 mm OR LESS PIPE

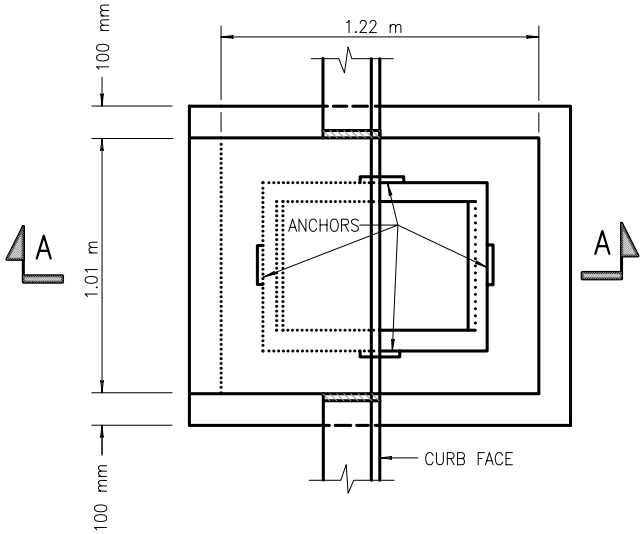

PLAN FOR PIPE GREATER THAN 450 mm TO 600 mm

NOTES:

1. ITEM 655.0201 M FRAME & GRATE– FRAME 735 mm X 953 mm GRATE 703 mm X 927 mm RECTANGULAR FRAME & GRATE ASSEMBLY TYPE NO. 11, SEE N.Y.S.D.O.T. STANDARD SHEETS SHEETS M655–6 & M655–11R1. PAYMENT AREA = 0.700 SQ. METERS.
2. REINFORCEMENT SHALL HAVE A COVER OF 50 mm UNLESS OTHERWISE SHOWN. THE COST OF ALL BAR REINFORCEMENT SHALL BE INCLUDED IN THE PRICE BID FOR DROP INLETS.
3. ALL CONCRETE FOR DROP INLETS SHALL BE CLASS "A". BENCHES SHALL BE CAST–IN–PLACE ON ALL STORM DROP INLETS REGARDLESS OF PIPE DIAMETER. COST TO BE INCLUDED IN DROP INLET ITEM.
4. WHEN CURB EXISTS AND CURB LANES ARE 3.962 m OR LESS, THIS DETAIL SHALL APPLY.
5. THE INTERIOR SIDES AND EXTERIOR BOTTOM AND SIDES OF ALL DROP INLETS TO BE COATED WITH TWO COATS OF KOPPERS SUPER SERVICE BLACK OR APPROVED EQUAL.
6. ALL PIPE CONNECTIONS TO STRUCTURE SHALL BE SEALED WITH 100% MORTAR.
7. THE INSIDE DIMENSIONS SHALL BE 610 mm BY 825 mm.
8. STEPS WILL NOT BE ALLOWED.

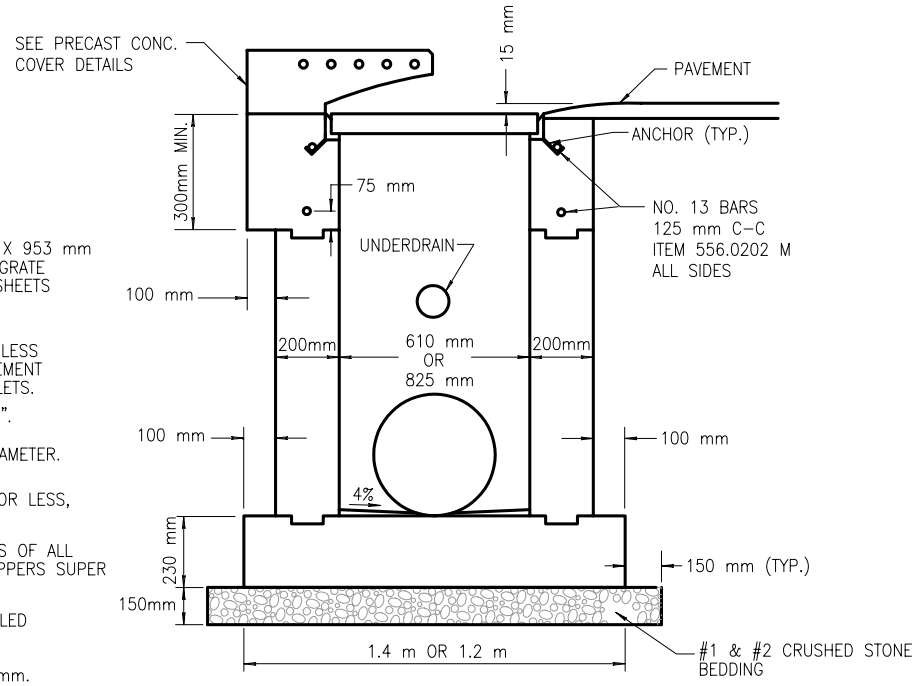

SECTION A–A

DROP INLET TYPE "S" CAST–IN–PLACE WITH RECESS CURB

NOT TO SCALE

11/16/04

REVISED