NOTES:

1. ITEM 655.02 M FRAME & GRATE- FRAME 735 mm x 952 mm GRATE 703 mm x 927 mm RECTANGULAR FRAME & GRATE ASSEMBLY TYPE NO. 11, SEE N.Y.S.D.O.T. STANDARD SHEETS SHEETS M655-6 AND M655-11R1.
   PAYMENT AREA = 0.669 SQ. METERS
2. REINFORCEMENT SHALL HAVE A COVER OF 50 mm UNLESS OTHERWISE SHOWN. THE COST OF ALL BAR REINFORCEMENT SHALL BE INCLUDED IN THE PRICE BID FOR DROP INLETS.
3. THE INTERIOR AND EXTERIOR OF ALL DROP INLETS TO BE COATED WITH TWO COATS OF KOPPERS SUPER SERVICE BLACK OR APPROVED EQUAL.
4. CLASS "A" CONCRETE IS TO BE USED. WALL THICKNESS SHALL BE 150 mm IF REINFORCED, 200 mm IF UNREINFORCED. ALL PIPE CONNECTIONS SHALL BE MADE WITH 100% MORTAR.
5. CLASS "A" CONCRETE BENCHES SHALL BE CAST-IN-PLACE ON ALL STORM DROP INLETS REGARDLESS OF PIPE DIAMETER. COST TO BE INCLUDED IN DROP INLET ITEM.
6. INSIDE DIMENSIONS SHALL BE 610 mm x 825 mm.
7. REFER TO FRAME & GRATE ANCHOR DETAIL.
8. STEPS WILL NOT ALLOWED.

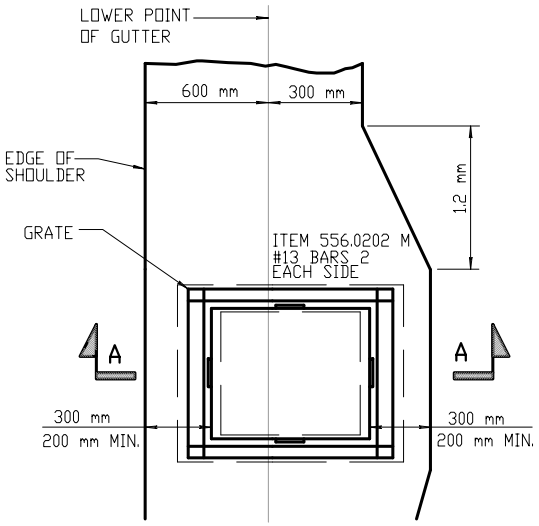

PLAN

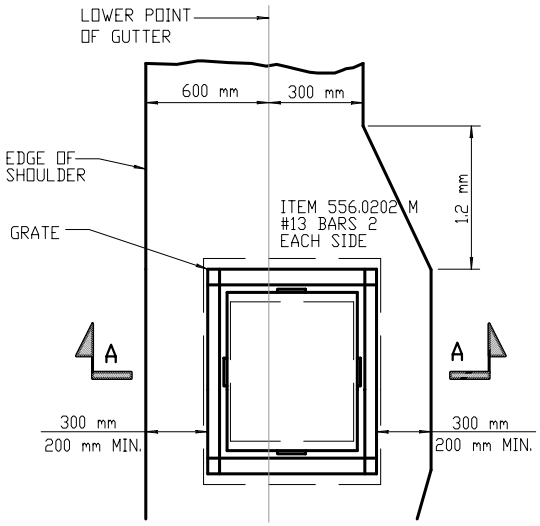

PLAN

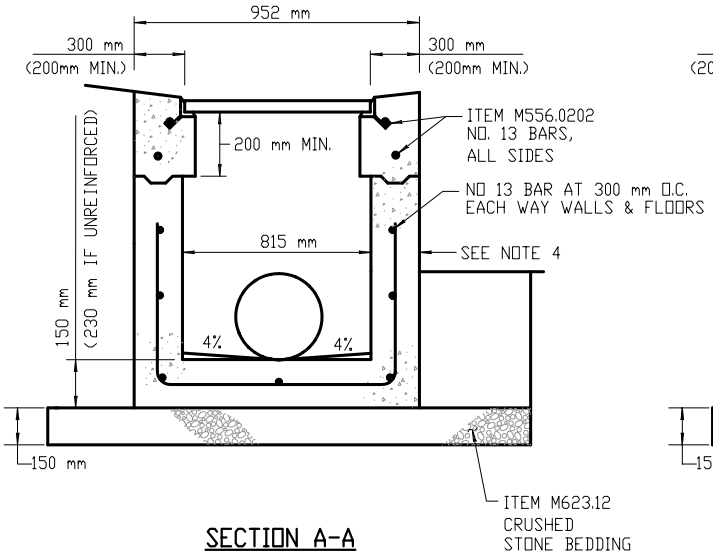

SECTION A-A

PLAN FOR PIPE GREATER THAN 450 mm UP TO 600 mm

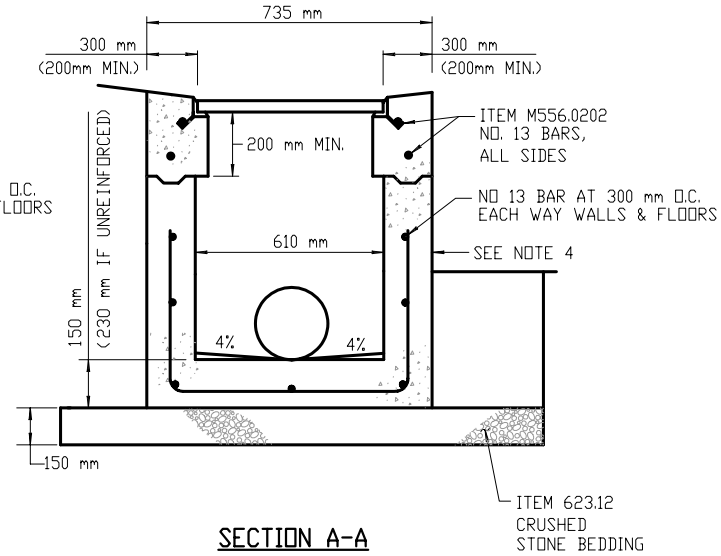

SECTION A-A

PLAN FOR PIPE 450 mm OR LESS

DROP INLET TYPE "S" PRECAST WITH GUTTER

NOT TO SCALE

11/16/04

REVISED