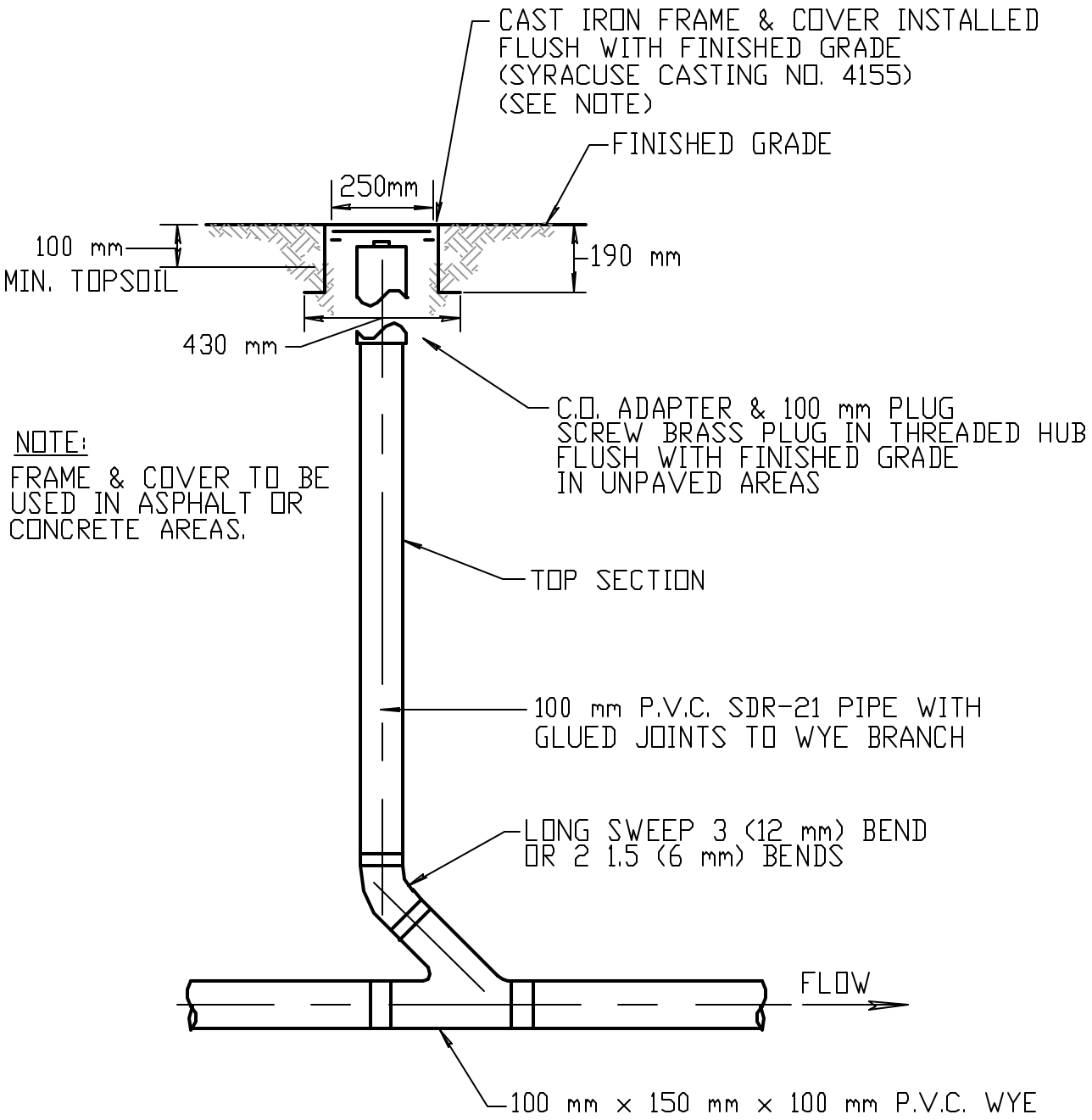

CLEANOUT IN-LINE

NOT TO SCALE

4/1/98

REVISED