REVISED

1/1/03

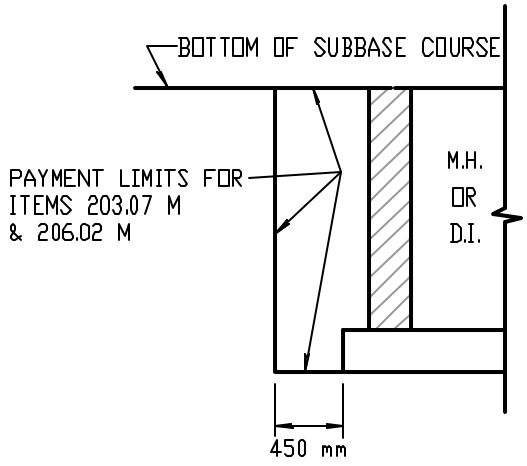

EXCAVATION UNDER PAVEMENT

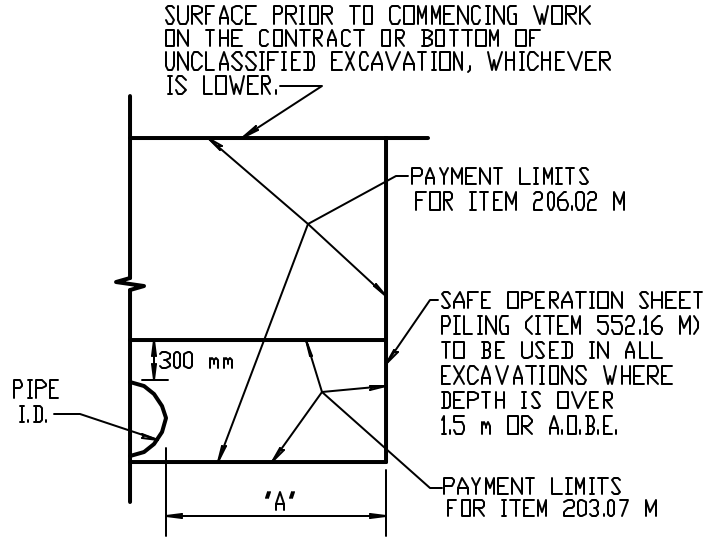

EXCAVATION OUTSIDE OF PAVEMENT

PIPE DIA.	DIM. 'A'
UP TO 450 mm	300 mm
475 TO 900 mm	450 mm
OVER 900 mm	600 mm

EXCAVATION LIMITS FOR SANITARY MANHOLES

NOT TO SCALE