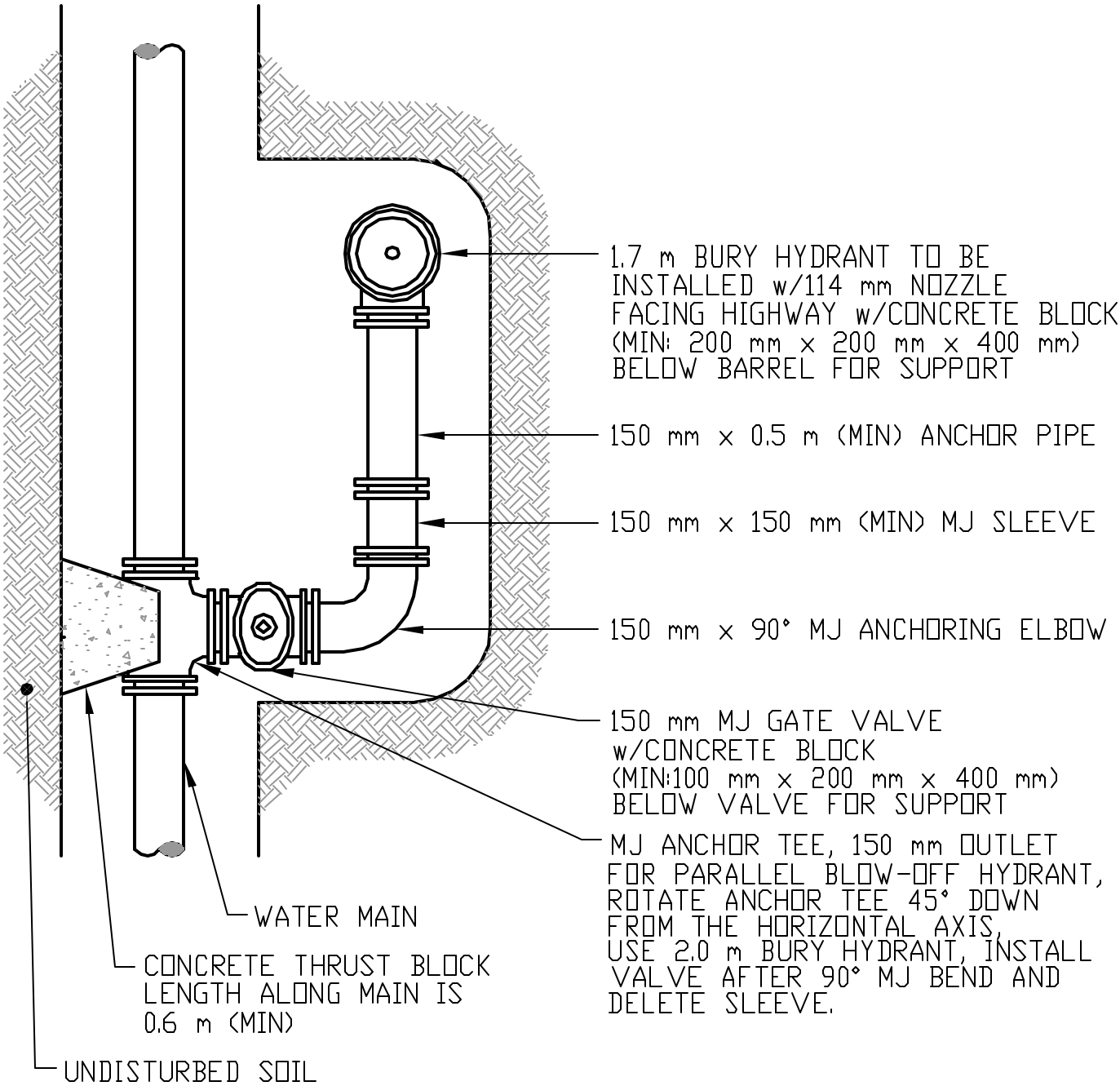

HYDRANT ASSEMBLY-PARALLEL

NOT TO SCALE

10/01/00

REVISED