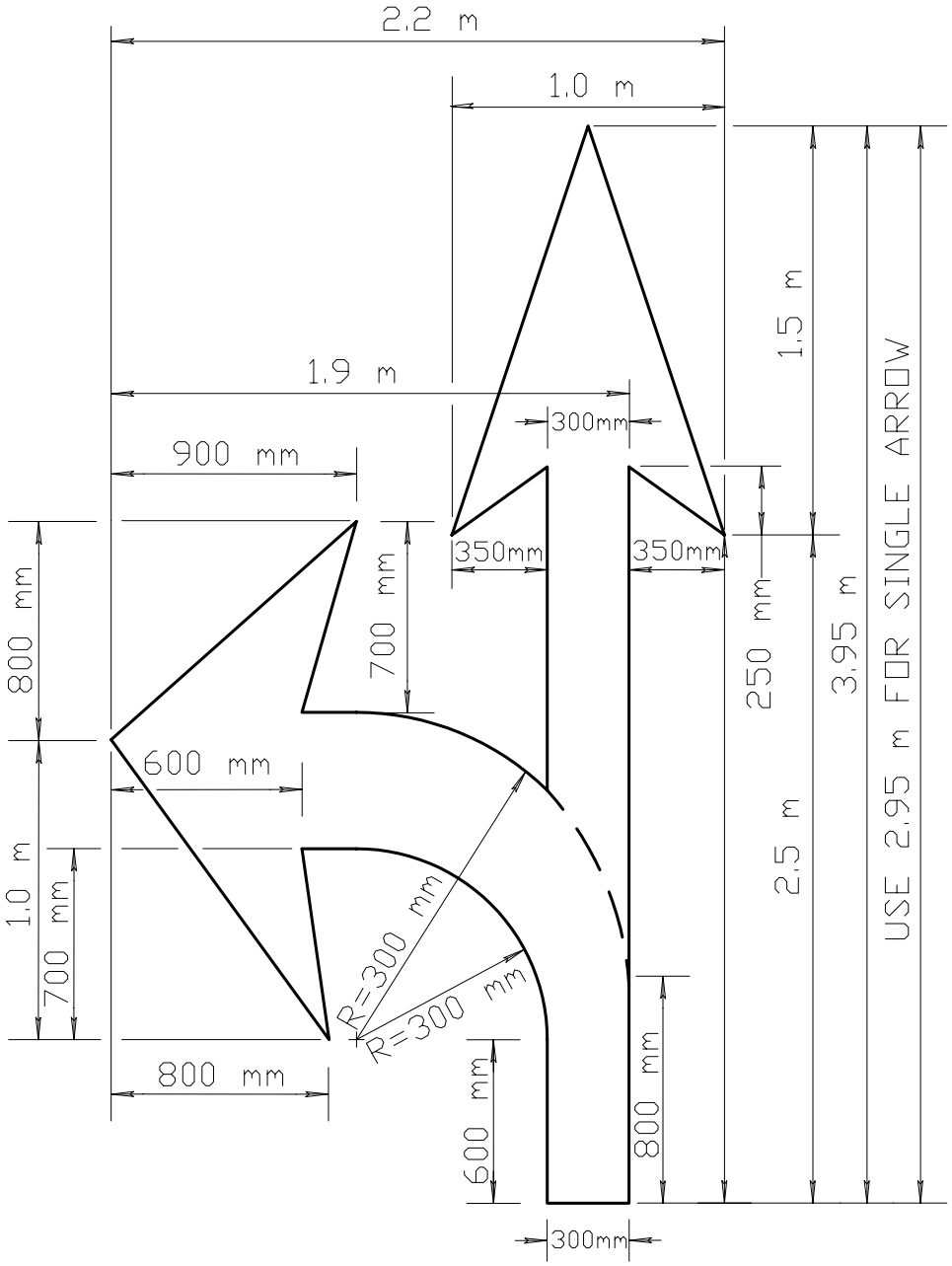

NOTE: DIMENSIONS ARE THE SAME
FOR RIGHT ARROW, REVERSED.

LEFT OR RIGHT & THRU TURN ARROW

ITEM NO. 686.1099 M (2 EA.)

NOT TO SCALE

10/1/00

REVISED