REVISED

4/1/98

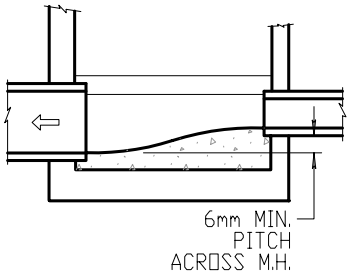

STANDARD INVERT

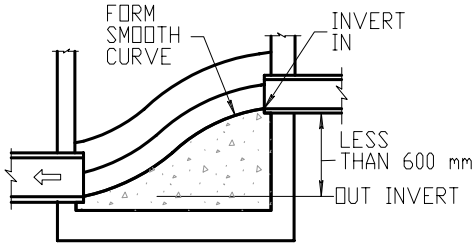

SMOOTH DROP INVERT FILLET

SECTION A-A

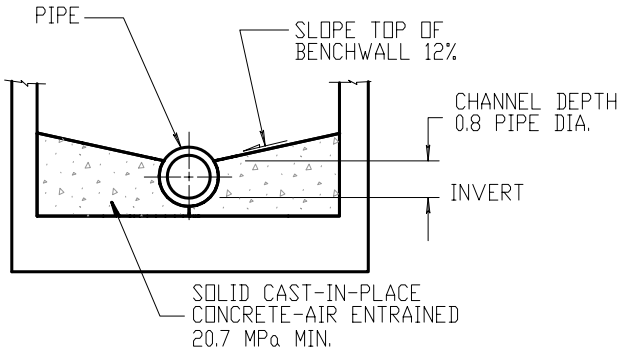

SECTION B-B

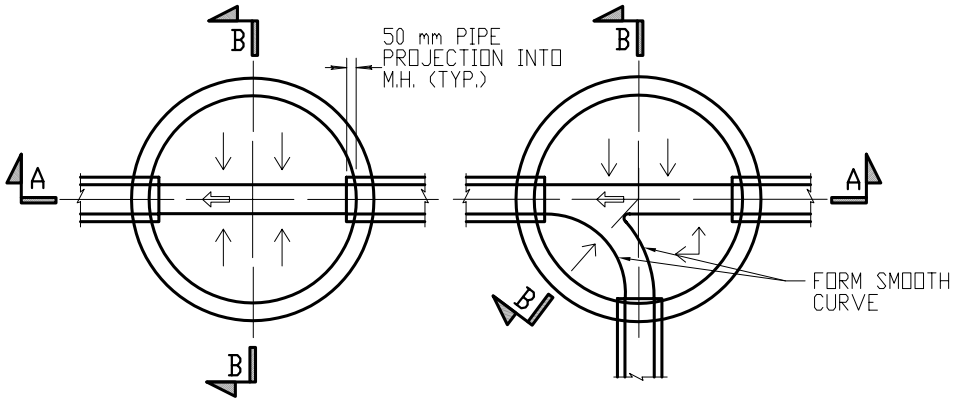

ONE-WAY INVERT

MULTIPLE INVERT

PLAN

MANHOLE - PRECAST CONCRETE INVERT

NOT TO SCALE