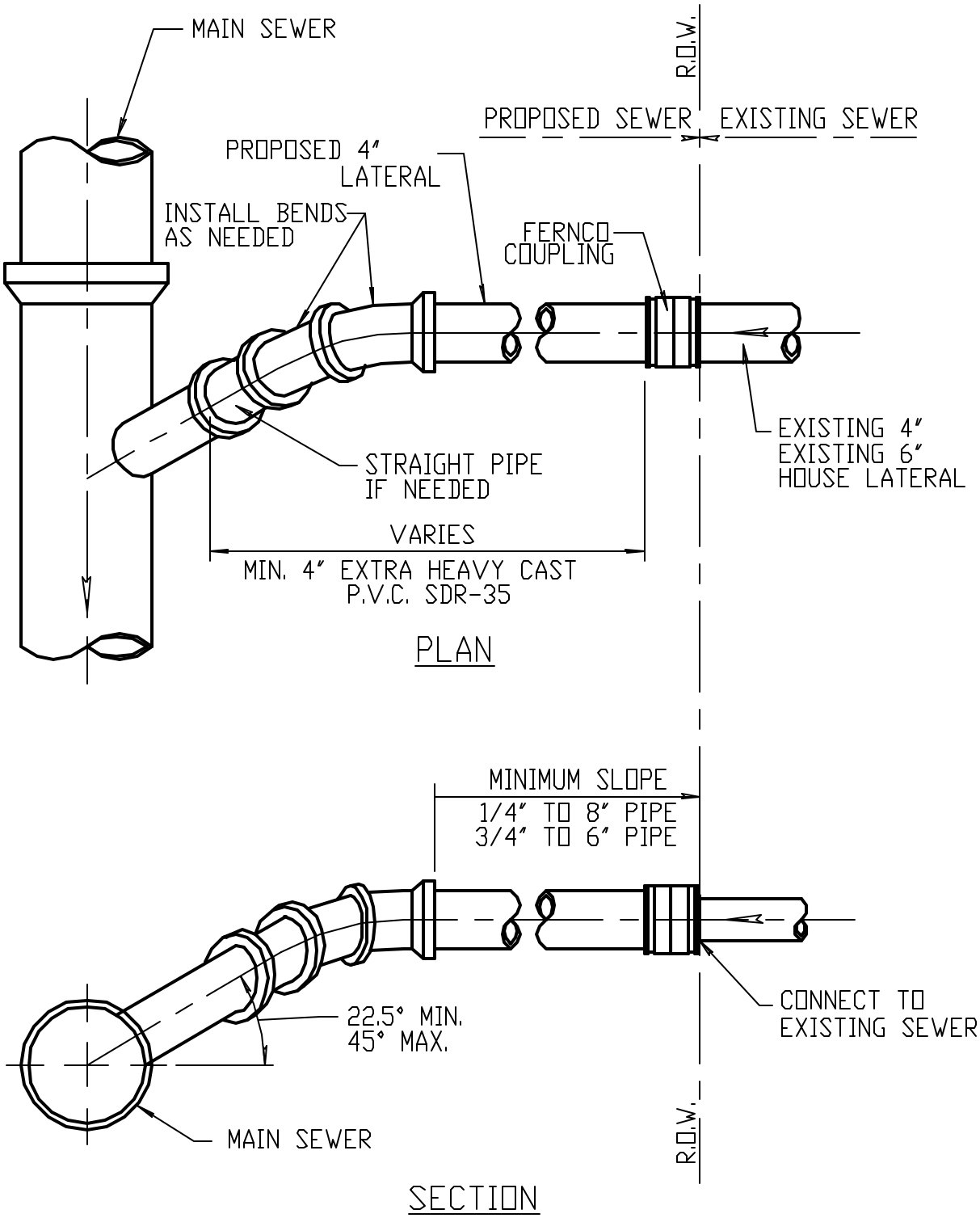

SANITARY SEWER WYE
BRANCH CONNECTION

NOT TO SCALE

4/1/98

REVISED