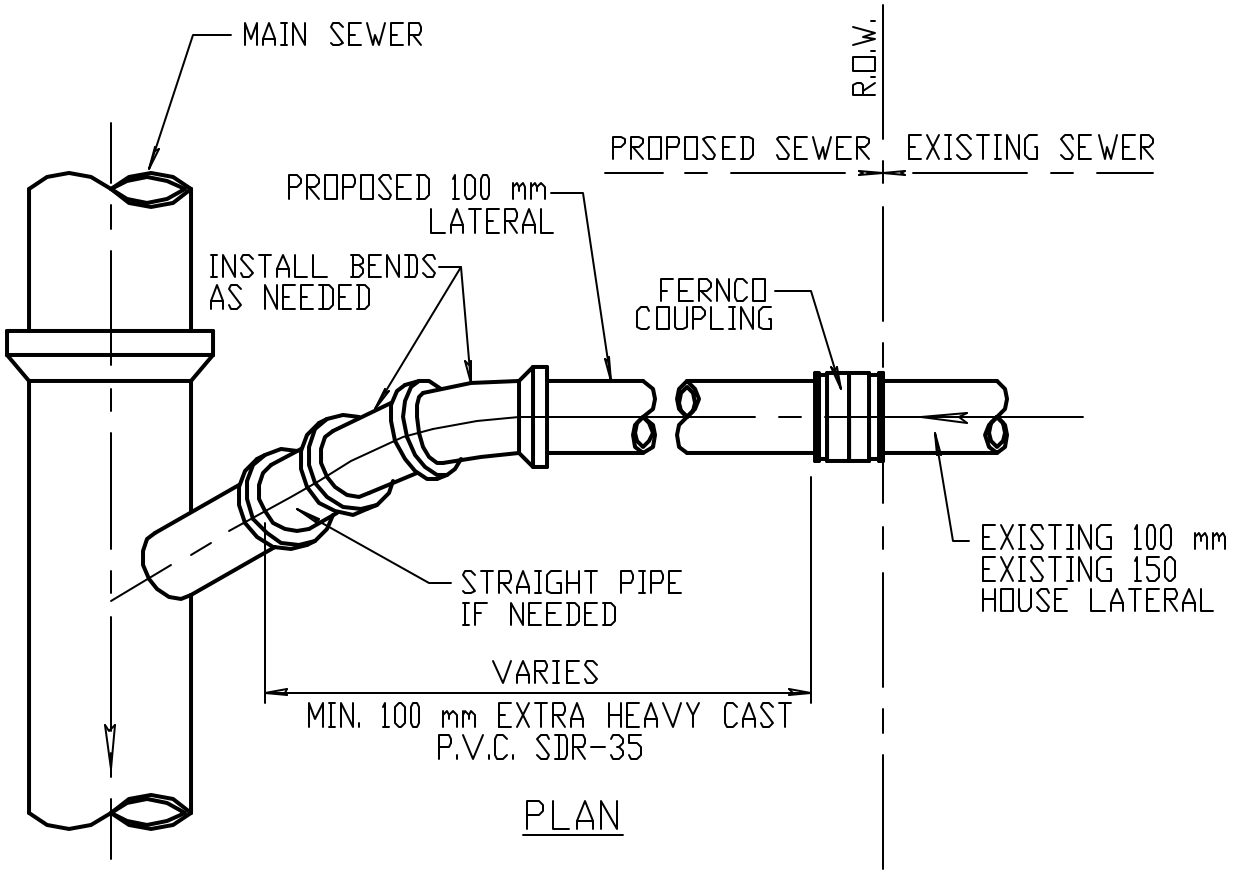


PLAN

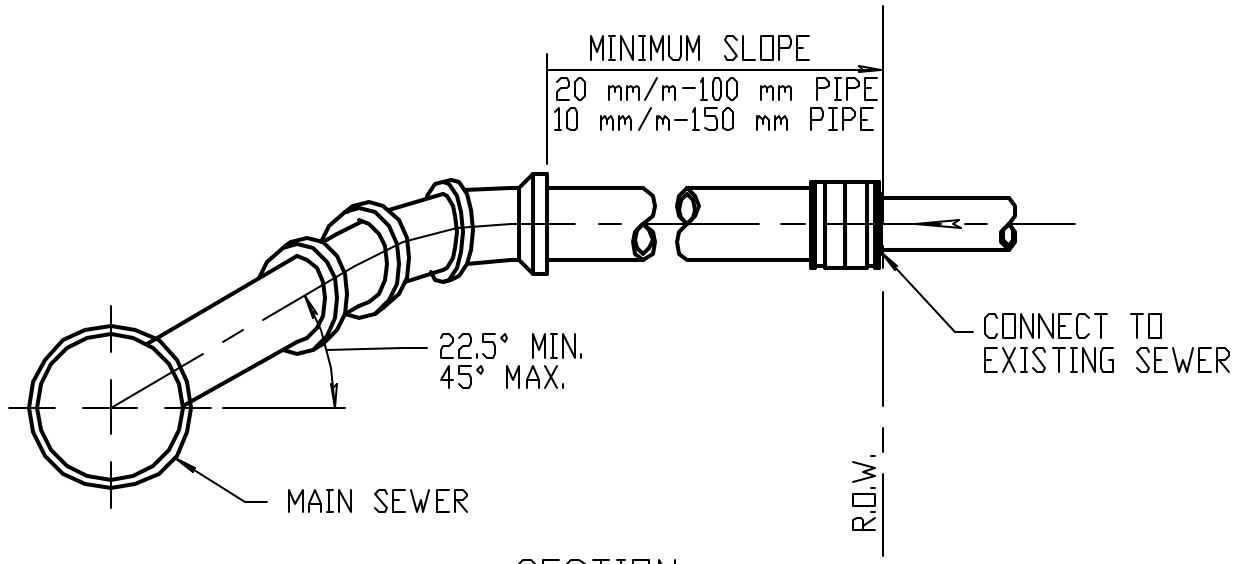


SECTION

# SANITARY SEWER WYE

## BRANCH CONNECTION

NOT TO SCALE

4/1/98

REVISED