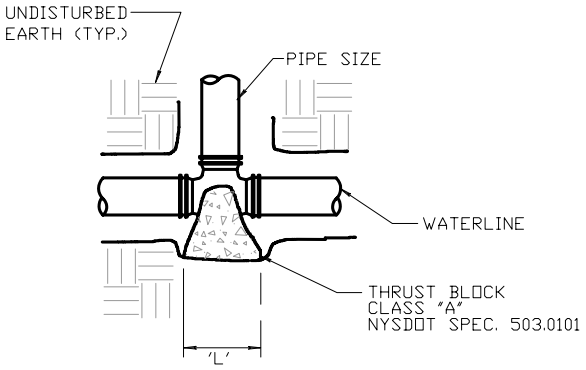

TEES

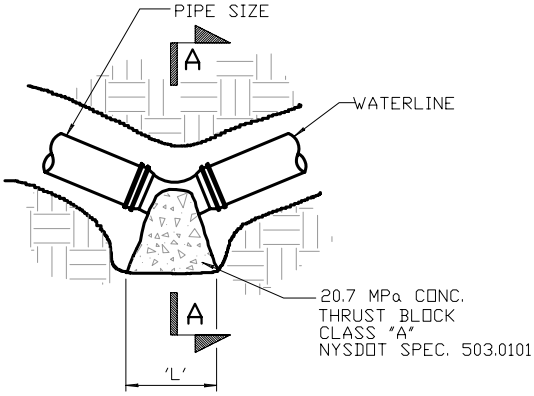

BENDS
5n TO 90n

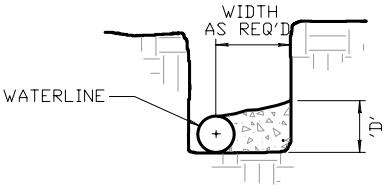

SECTION A-A

REQUIRED BEARING AREAS & DIMENSIONS
FOR CONCRETE THRUST BLOCKS

PIPE SIZE (mm)	TEE(See NOTE 5)		90° (1/4)BEND		45° (1/8)BEND		22.5° (1/16)BEND		11.25° (1/32)BEND	
	AREA s	DIMENSIONS D x L (m)	AREA s	DIMENSIONS D x L (m)	AREA s	DIMENSIONS D x L (m)	AREA s	DIMENSIONS D x L (m)	AREA s	DIMENSIONS D x L (m)
100	0.4	0.3 x 0.5	0.6	0.3 x 0.6	0.3	0.3 x 0.5	0.2	0.2 x 0.5	0.1	0.2 x 0.3
150	1.0	0.5 x 0.8	1.4	0.6 x 0.8	0.7	0.5 x 0.6	0.4	0.3 x 0.5	0.2	0.5 x 0.5
200	1.9	0.6 x 0.9	2.4	0.6 x 1.2	1.3	0.6 x 0.8	0.7	0.5 x 0.5	0.3	0.3 x 0.5
300	3.9	1.1 x 1.1	5.5	1.2 x 1.4	3.0	0.8 x 1.2	1.5	0.6 x 0.8	0.8	0.5 x 0.8

THRUST BLOCK

NOT TO SCALE

8/25/00

REVISED