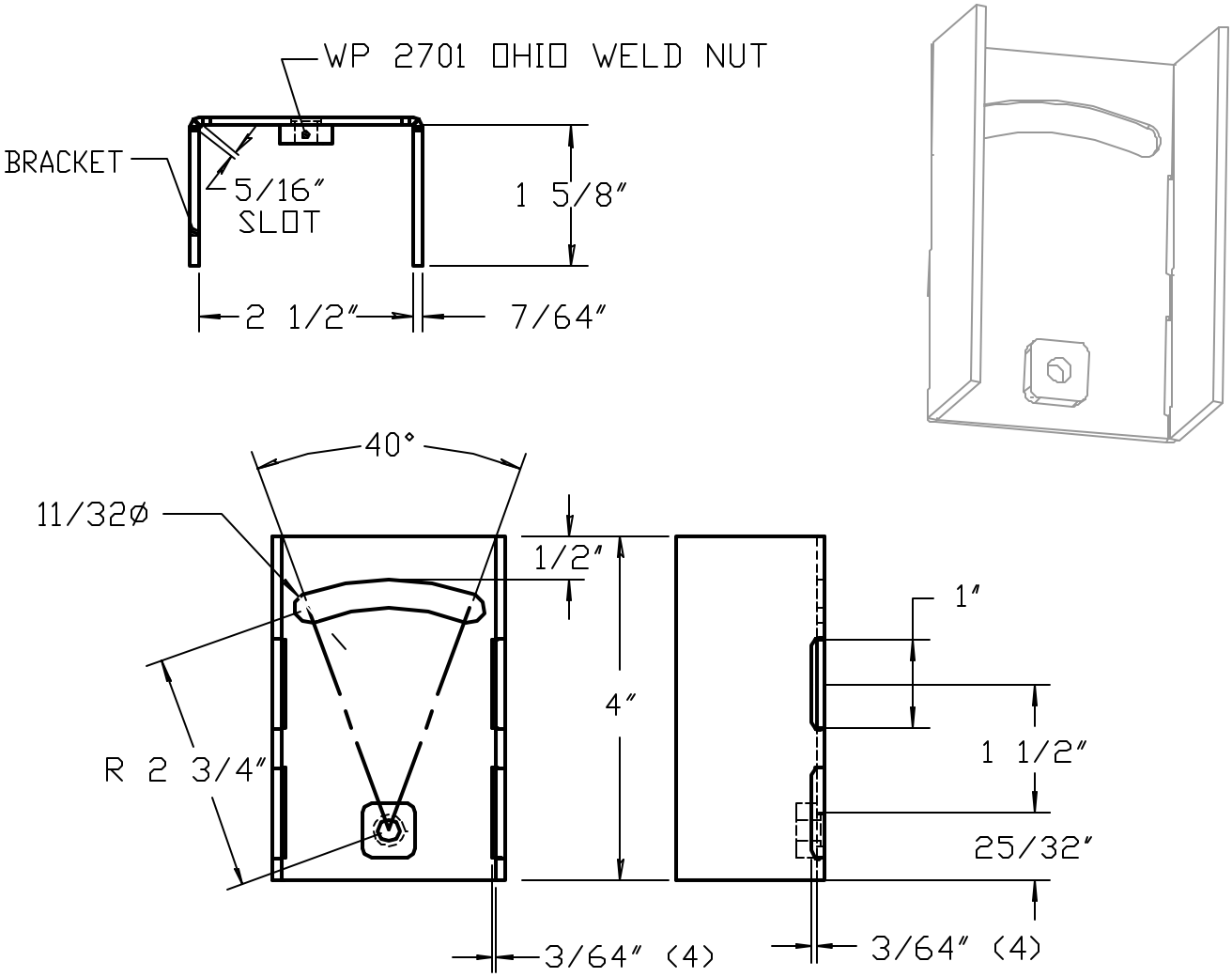

NOTES:

1. BRACKET TO BE BANDED TO THE MAST ARM WITH STAINLESS STEEL BANDING MATERIAL. (3/4″ WIDE x 0.015″ THICK)
2. BRACKETS SHALL BE 12 GAUGE GALVANIZED STEEL
3. SHORT BRACKET FOR STREET NAME SIGNS (USE 2 BANDS PER BRACKET)

MAST ARM SIGN BRACKET - SHORT

NOT TO SCALE

2/2/04

REVISED