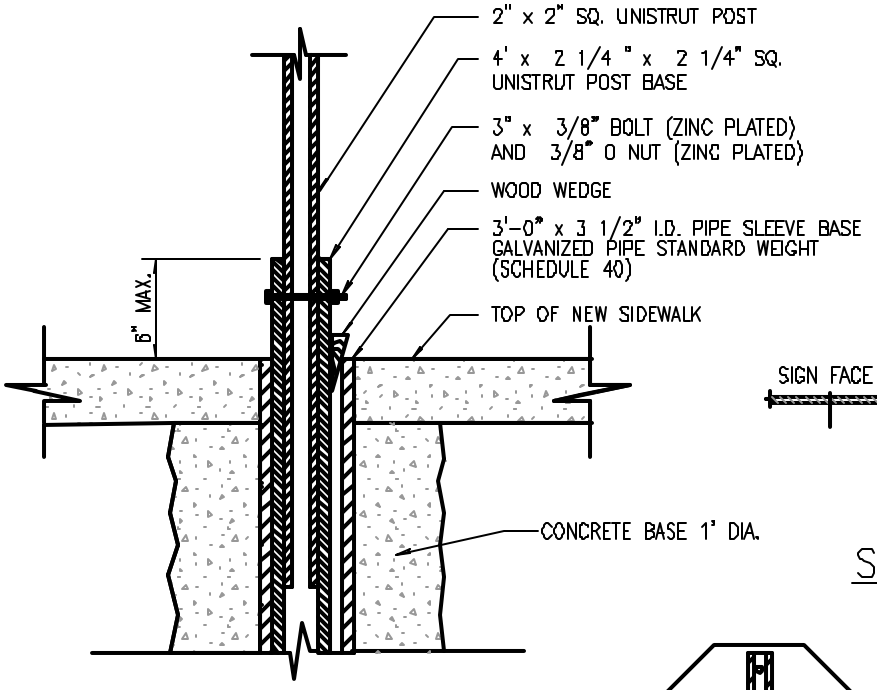


SECTION B – B

NOT TO SCALE

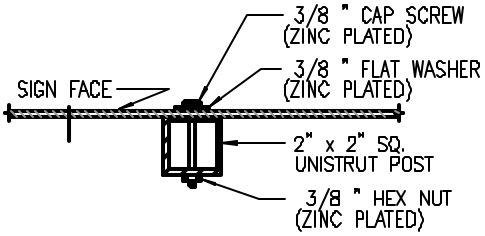


SECTION A – A

NOT TO SCALE

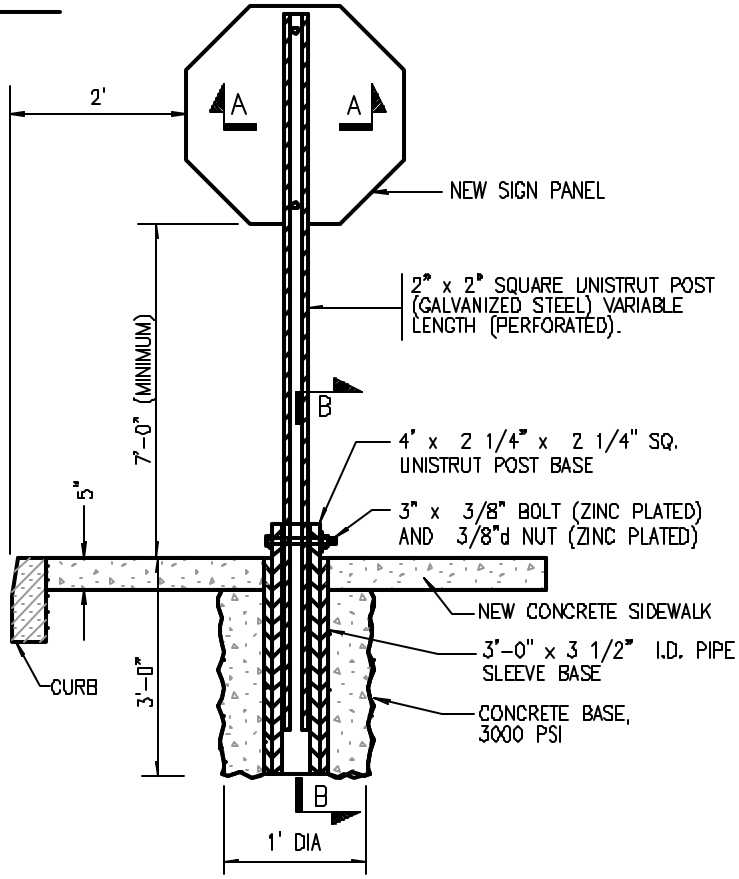


POST MOUNTED SIGN
INSTALLATION IN CONCRETE

NOT TO SCALE

01/11/00

REVISED