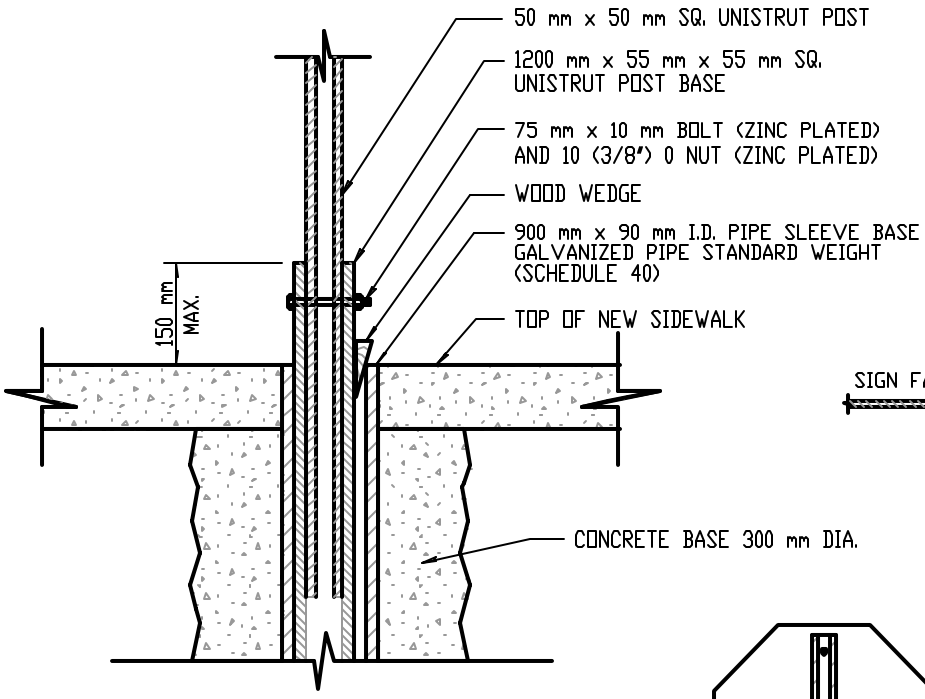

SECTION B - B

NOT TO SCALE

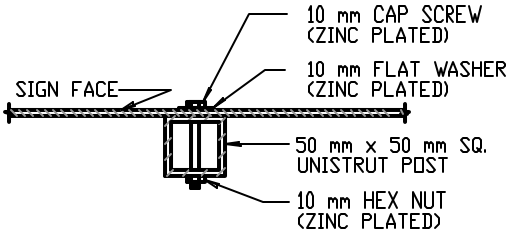

SECTION A - A

NOT TO SCALE

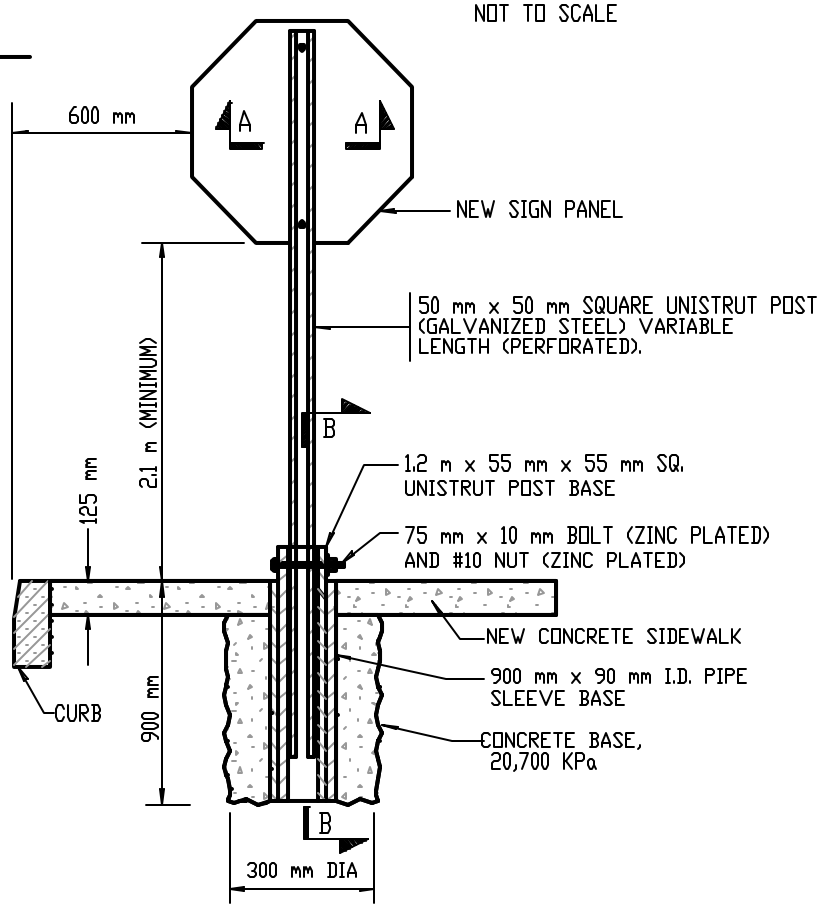

POST MOUNTED SIGN
INSTALLATION IN CONCRETE

NOT TO SCALE

4/1/98

REVISED