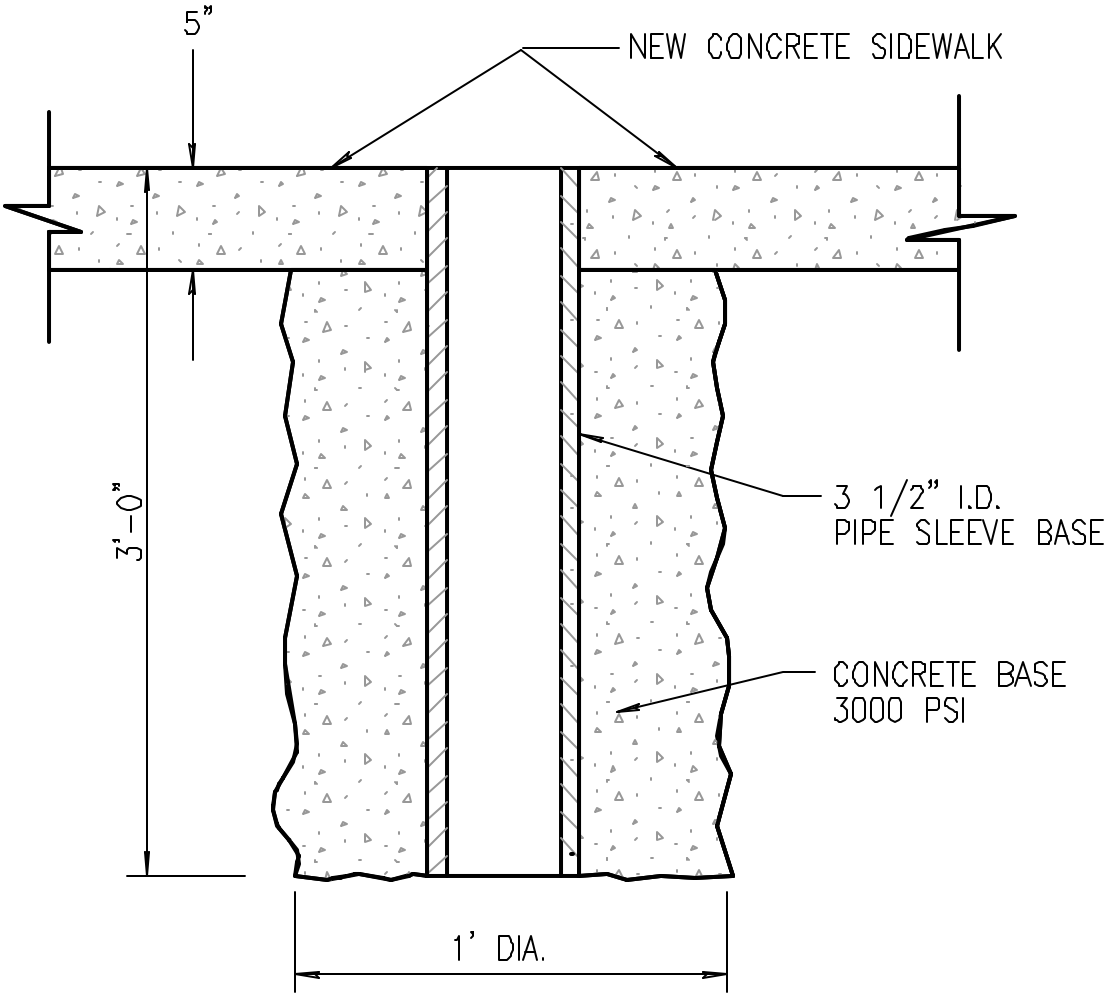

SIGN POST SLEEVE BASE INSTALLATION

NOT TO SCALE

3/8/99

REVISED