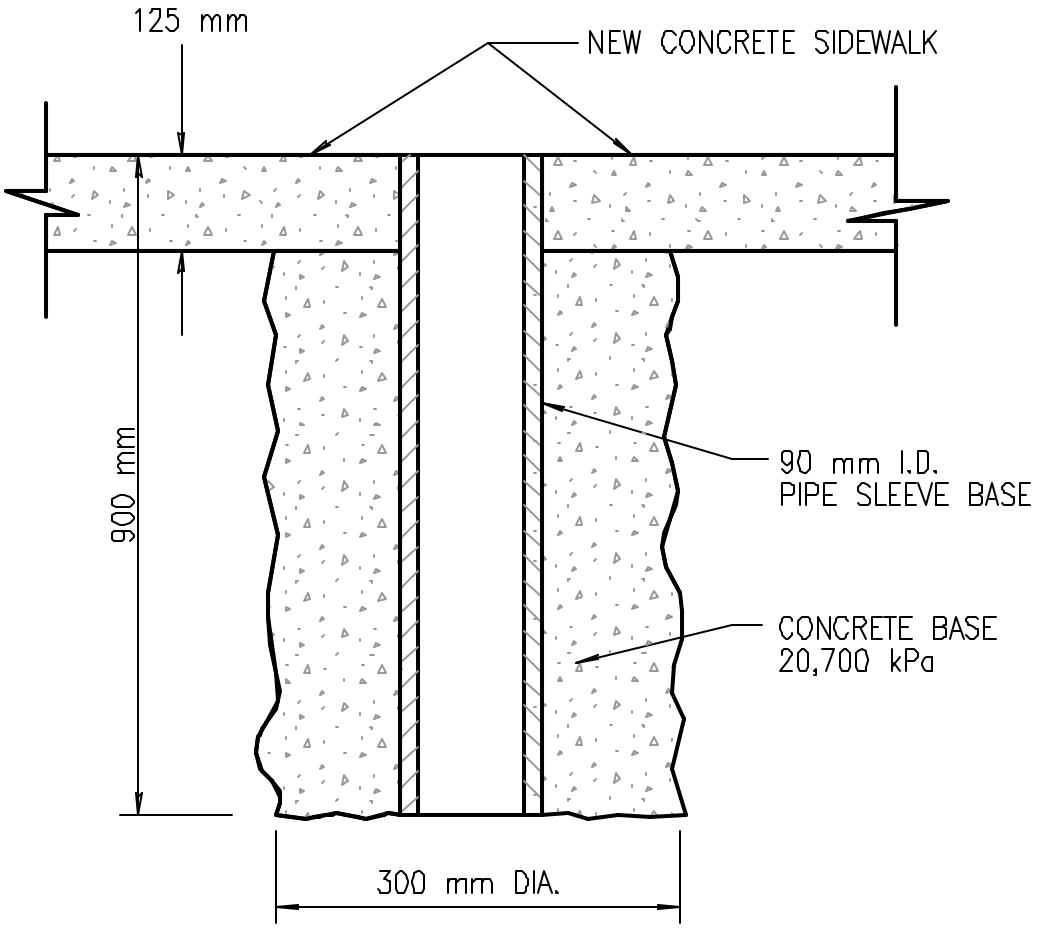

SIGN POST SLEEVE BASE INSTALLATION

NOT TO SCALE

11/30/99

REVISED