REVISED

4/1/98

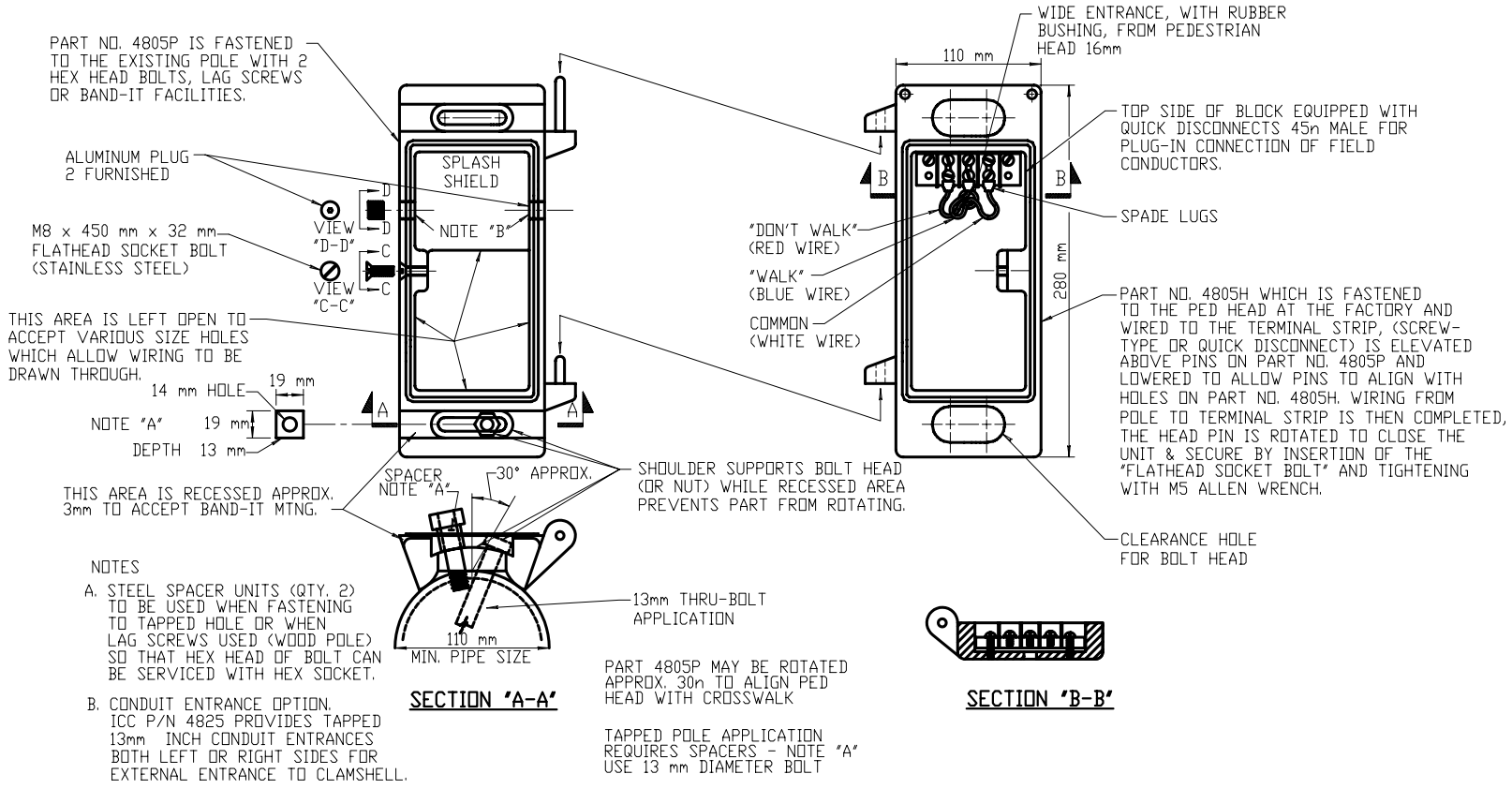

NOTES

A. STEEL SPACER UNITS (QTY. 2) TO BE USED WHEN FASTENING TO TAPPED HOLE OR WHEN LAG SCREWS USED (WOOD POLE) SO THAT HEX HEAD OF BOLT CAN BE SERVICED WITH HEX SOCKET.

B. CONDUIT ENTRANCE OPTION. ICC P/N 4825 PROVIDES TAPPED 13mm INCH CONDUIT ENTRANCES BOTH LEFT OR RIGHT SIDES FOR EXTERNAL ENTRANCE TO CLAMSHELL.

PART 4805P MAY BE ROTATED APPROX. 30n TO ALIGN PED HEAD WITH CROSSWALK

TAPPED POLE APPLICATION REQUIRES SPACERS - NOTE "A" USE 13 mm DIAMETER BOLT

CLAMSHELL PEDESTRIAN SIGNAL BRACKET MOUNT

NOT TO SCALE