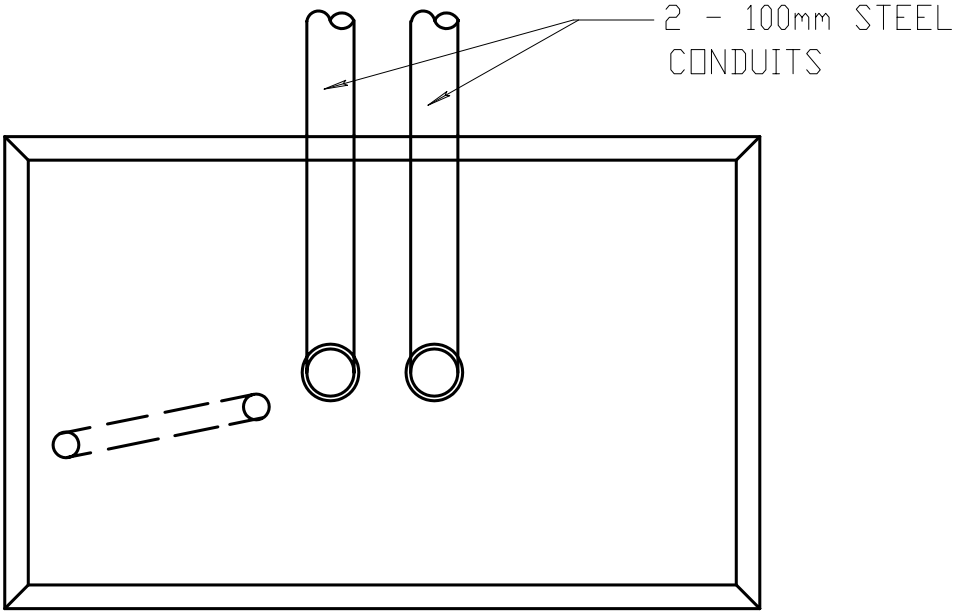

FRONT OR REAR CONDUIT EXIT

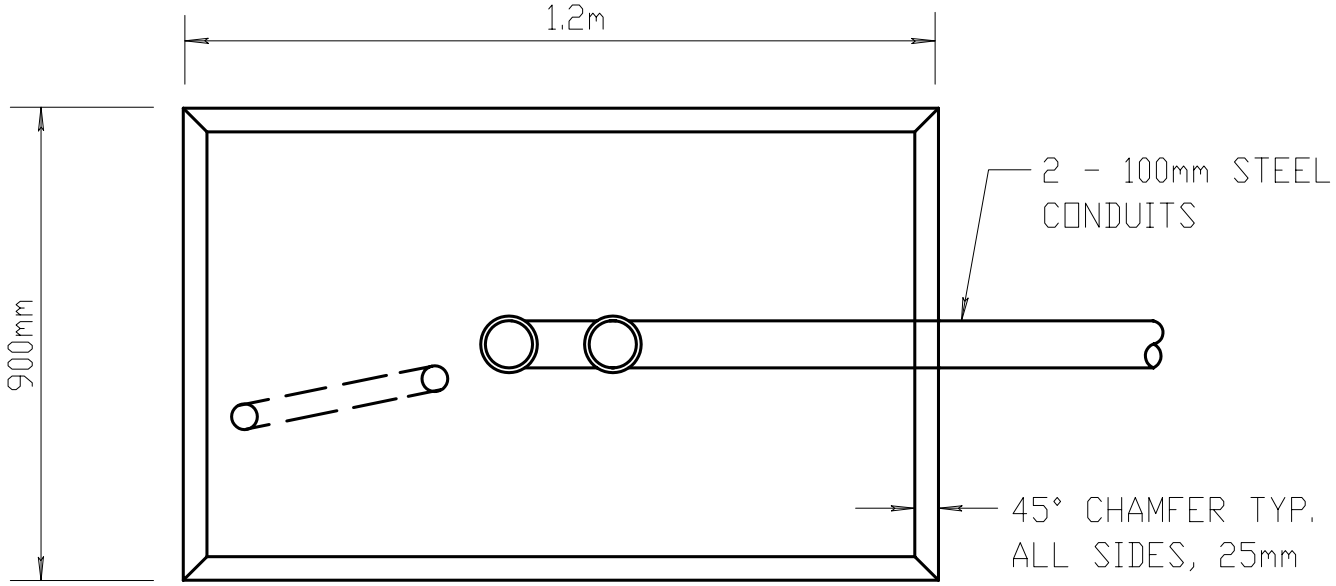

SIDE CONDUIT EXIT

CONCRETE CONTROLLER BASE - CONDUIT EXIST

NOT TO SCALE

4/1/98

REVISED