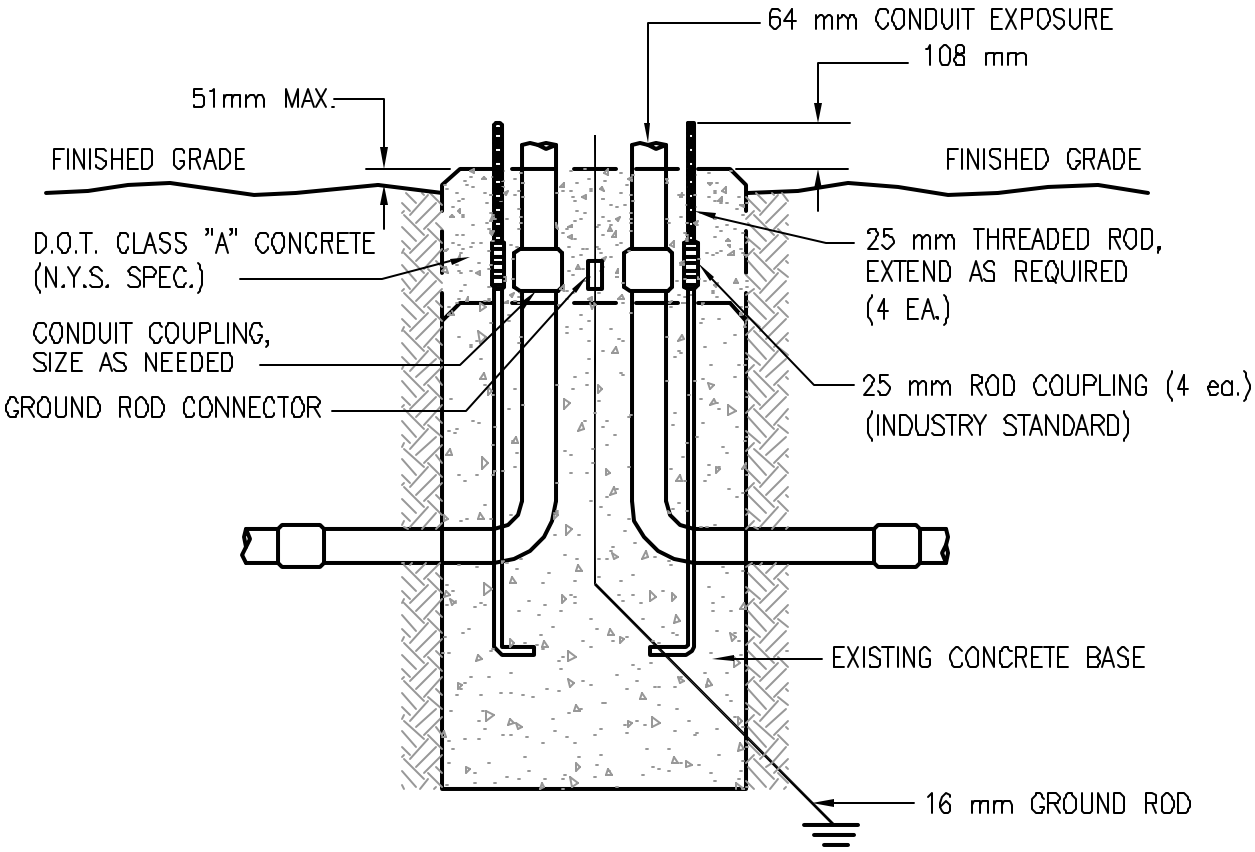

NOTES:

1) EXTEND ANCHOR RODS, CONDUIT AND GROUND ROD.

2) FORM AND POUR POLE BASE CAP.

3) RE-INSTALL TRANSFORMER BASE AND POLE.

4) CONDUCTORS MAY NEED TO BE REPLACED IF THERE IS NOT ENOUGH SLACK TO MAINTAIN 152 mm OF EXPOSED CABLE.

5) SCARIFY AND/OR REMOVE EXISTING TOP SURFACE OF POLE BASE TO SUFFICIENT DEPTH TO ACCOMMODATE THE NEW TOP POUR. PLACE SLURRY BOND COAT ON SURFACE PRIOR TO TOP POUR.

LIGHT POLE BASE EXTENSION DUAL CONDUIT

NOT TO SCALE

11/27/02

REVISED